VUE A

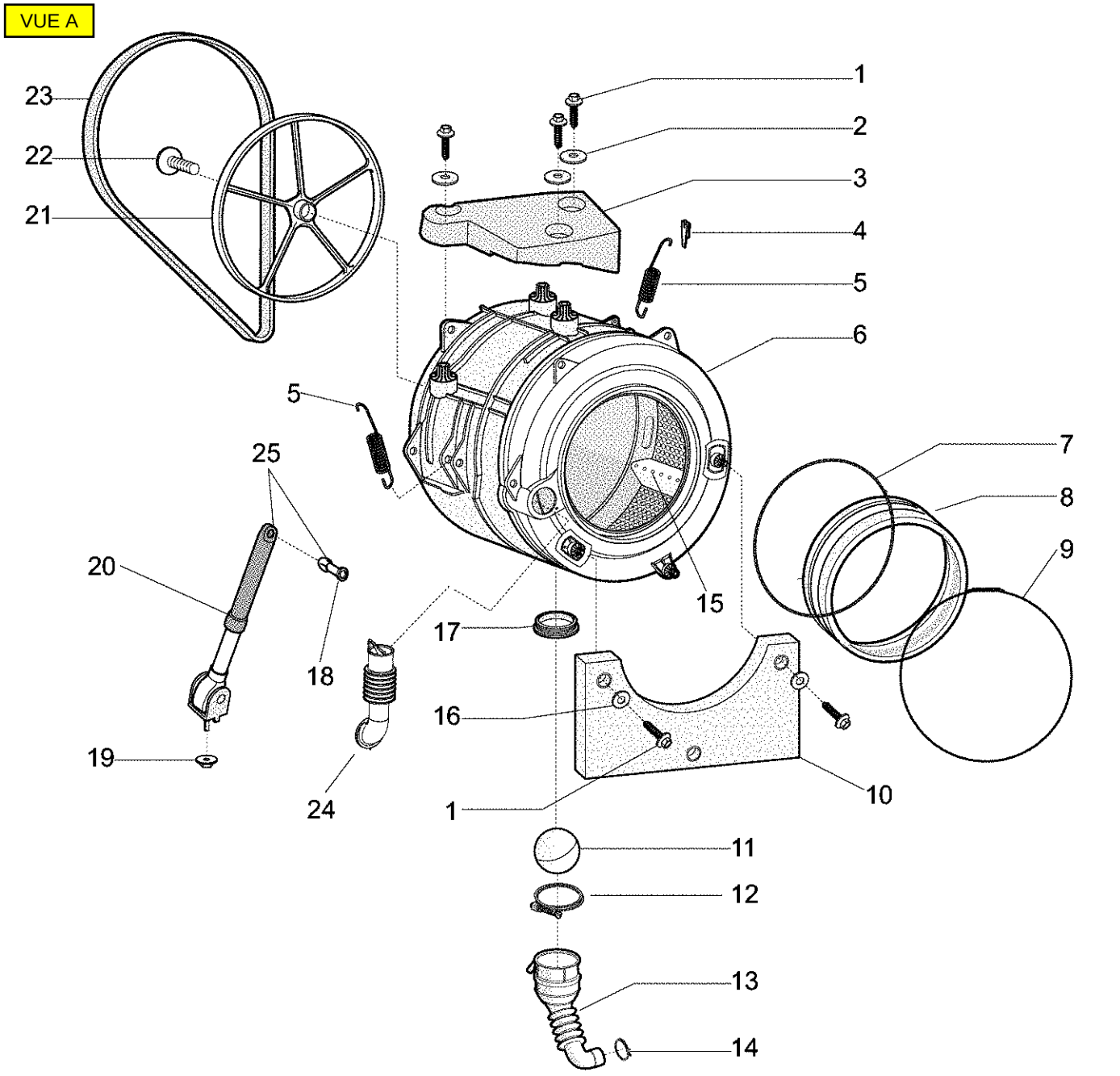

VUE B

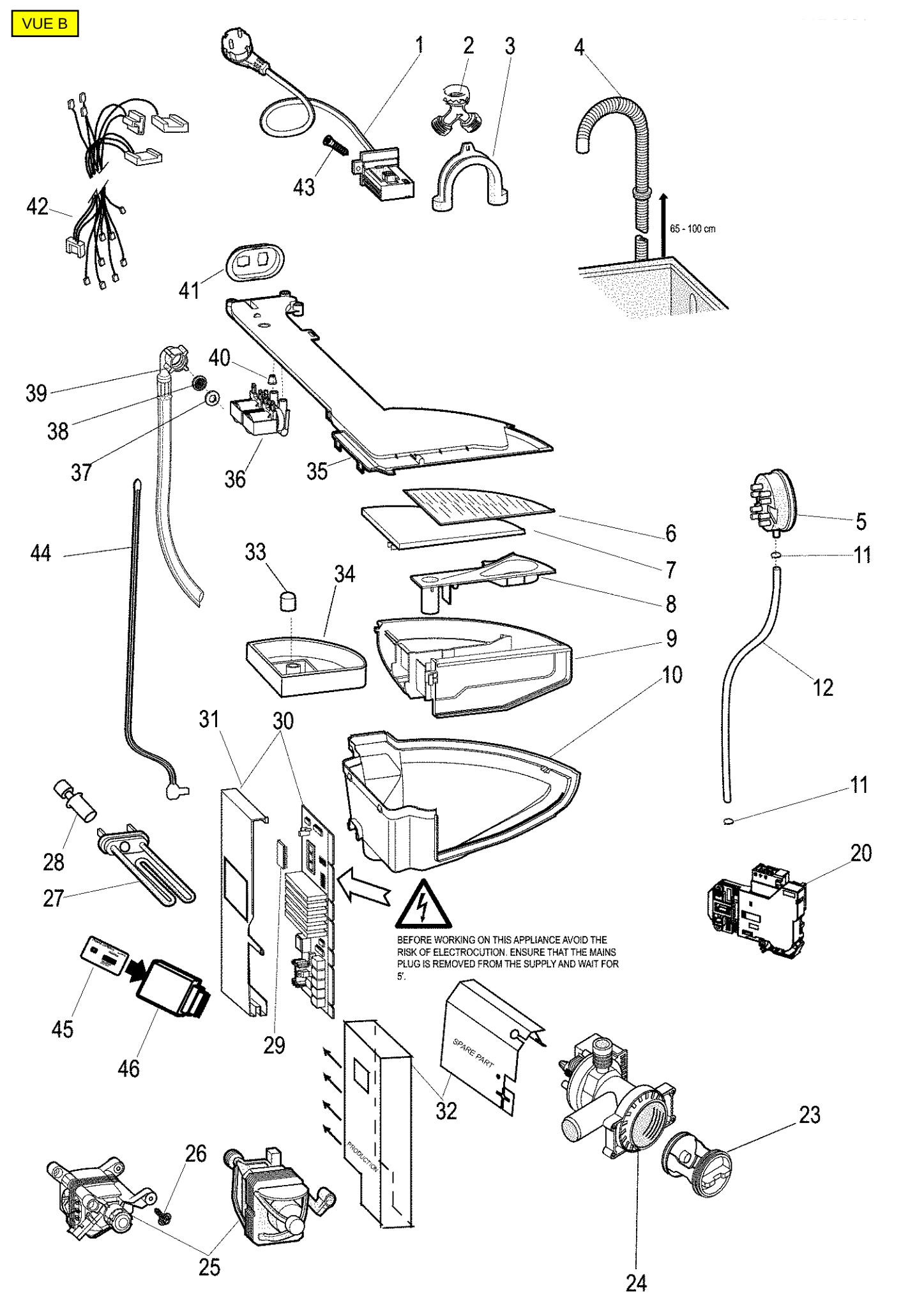
1
2
3
4
43
42
65 - 100 cm
41
40
39
38
37
36
35
44
6
7
5
11
33
34
8
9
10
12
31
30
11
28
27
20
BEFORE WORKING ON THIS APPLIANCE AVOID THE RISK OF ELECTROCUTION. ENSURE THAT THE MAINS PLUG IS REMOVED FROM THE SUPPLY AND WAIT FOR 5'.
45
46
29
SPARE PART
32
PRODUCTION
23
26
25
24

VUE C

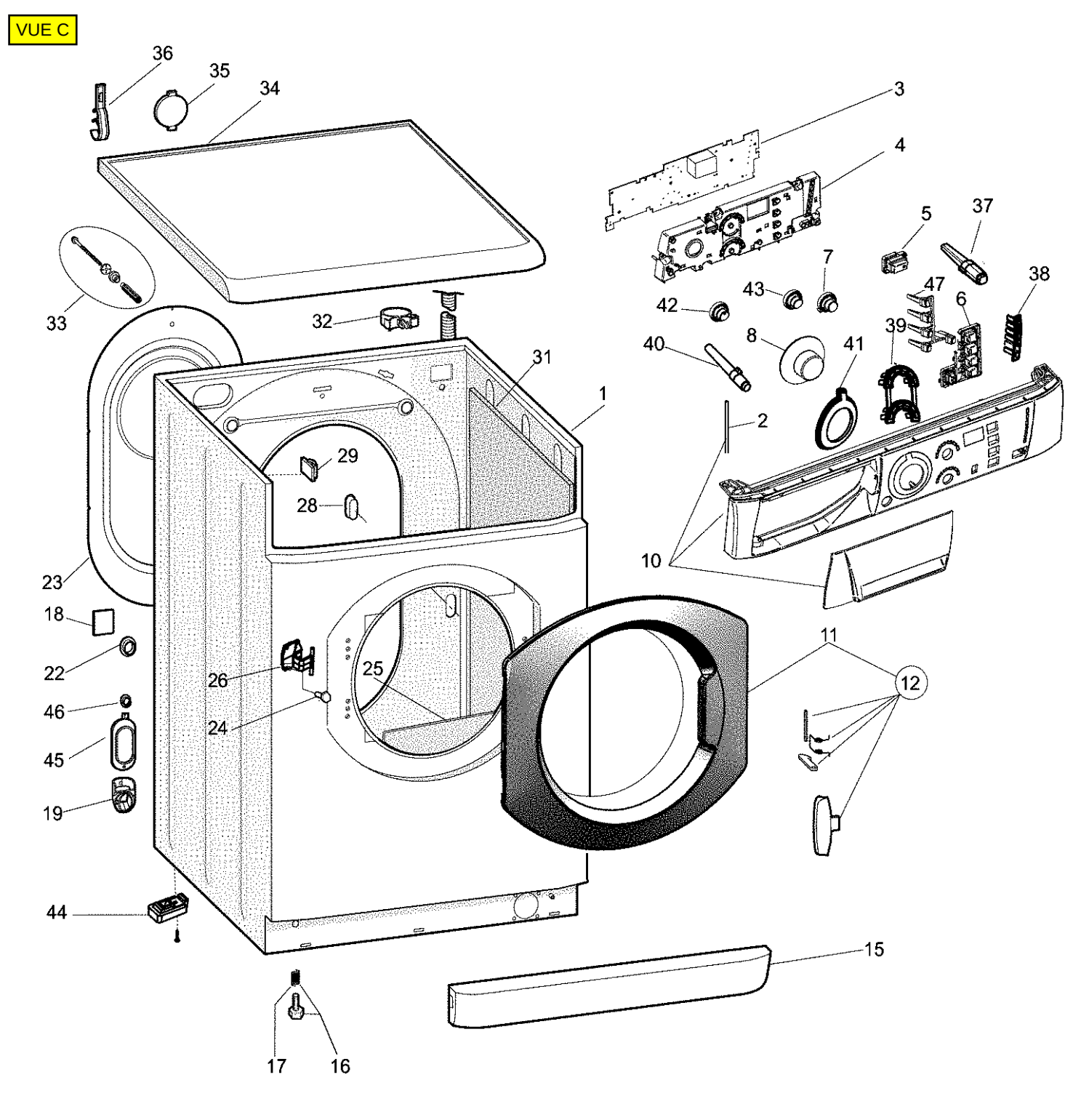

36
35
34
3
4
5
37
7
38
43
47
6
42
39
8
40
41
33
32
31
1
2
29
28
10
23
18
11
22
26
25
12
46
24
45
19
44
15
17
16