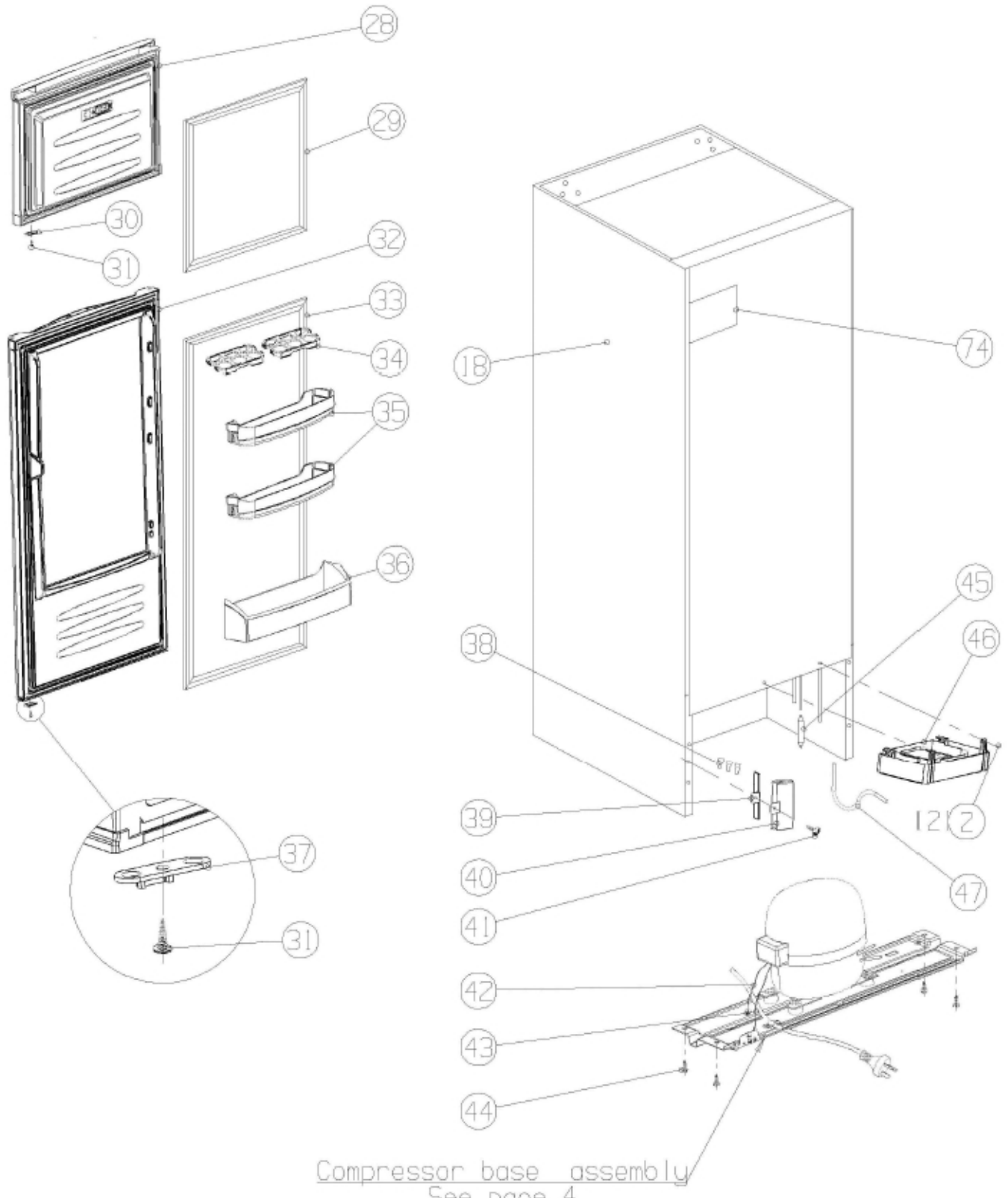

Compressor base assembly

See page 4

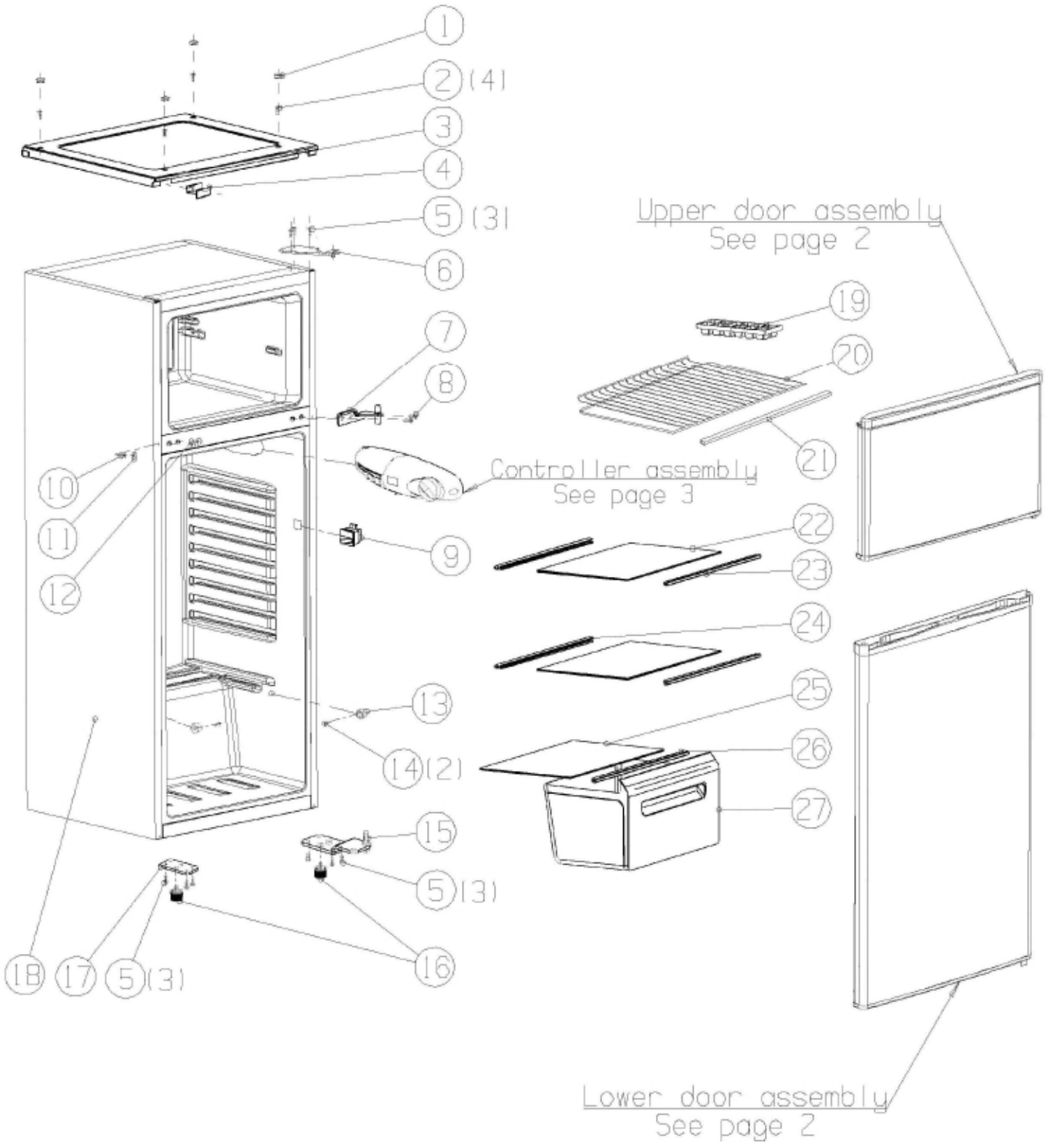
1
2 (4)
3
4
5 (3)
6
7
8
9
10
11
12
13
14 (2)
15
5 (3)
16
18
17
5 (3)
Upper door assembly
See page 2
19
20
21
Controller assembly
See page 3
22
23
24
25
26
27
Lower door assembly
See page 2

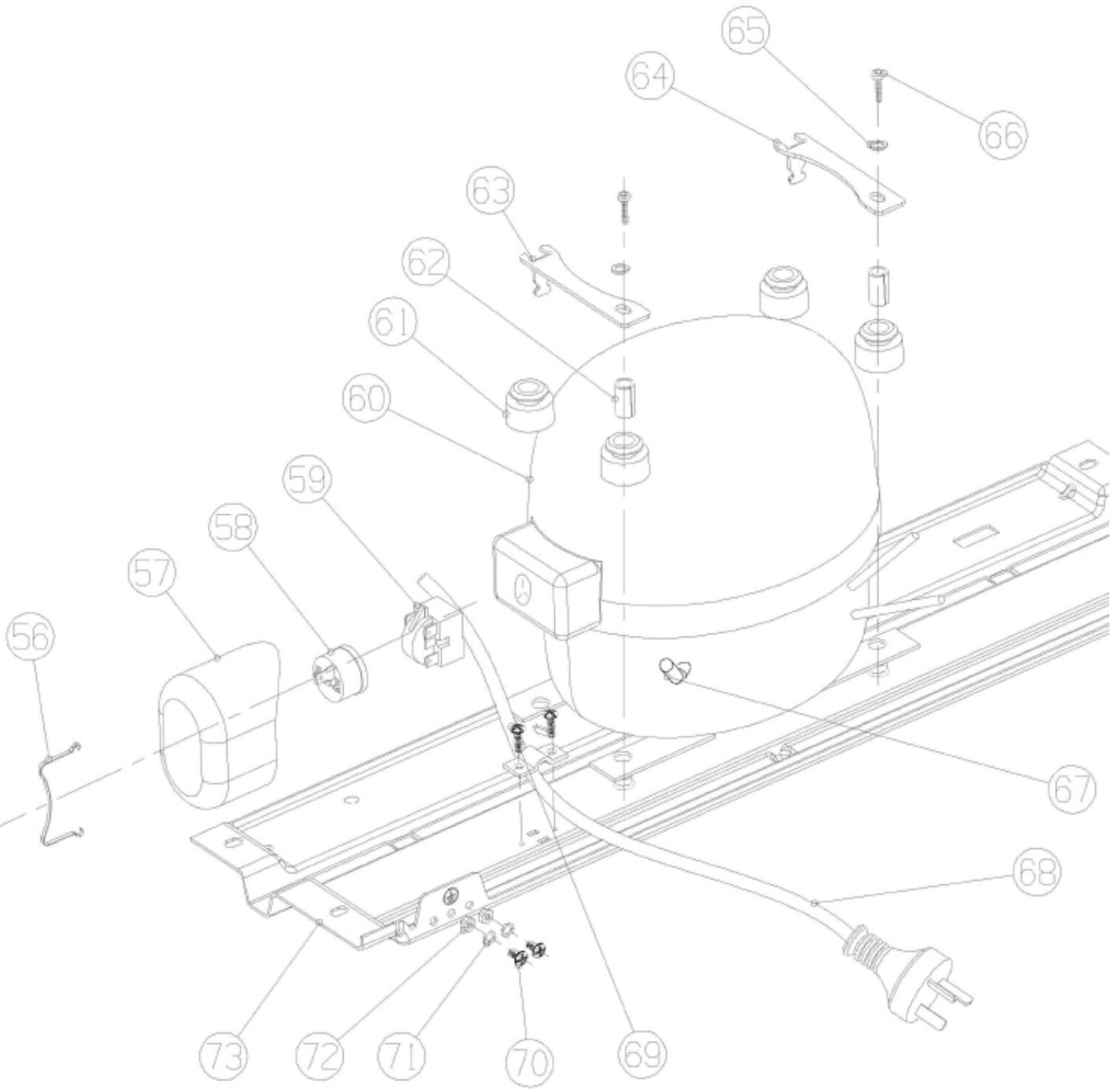
65
64
66
63
62
61
60
59
58
57
56
67
68
73
72
71
70
69

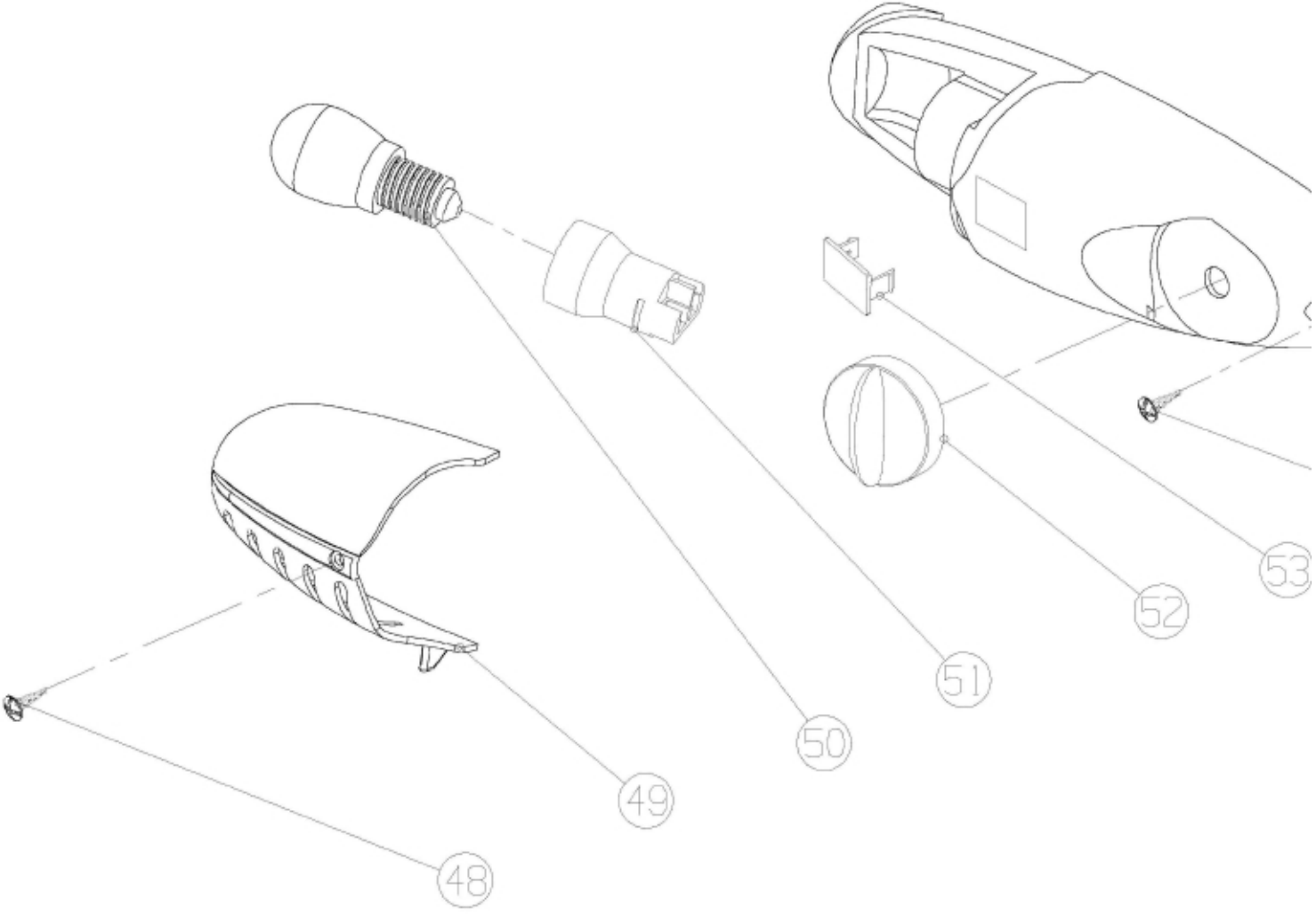
48
49
50
51
52
53

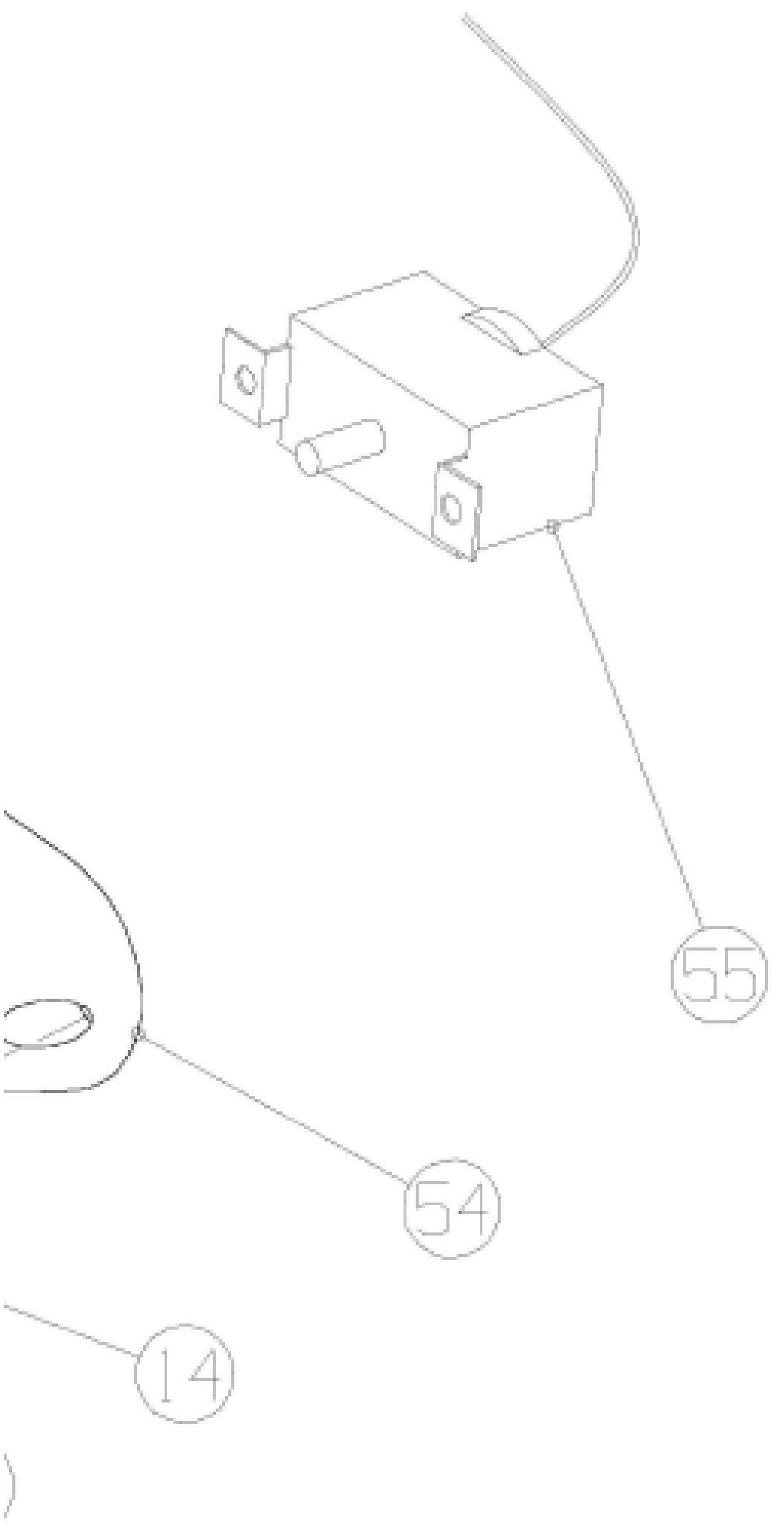
55
54
14