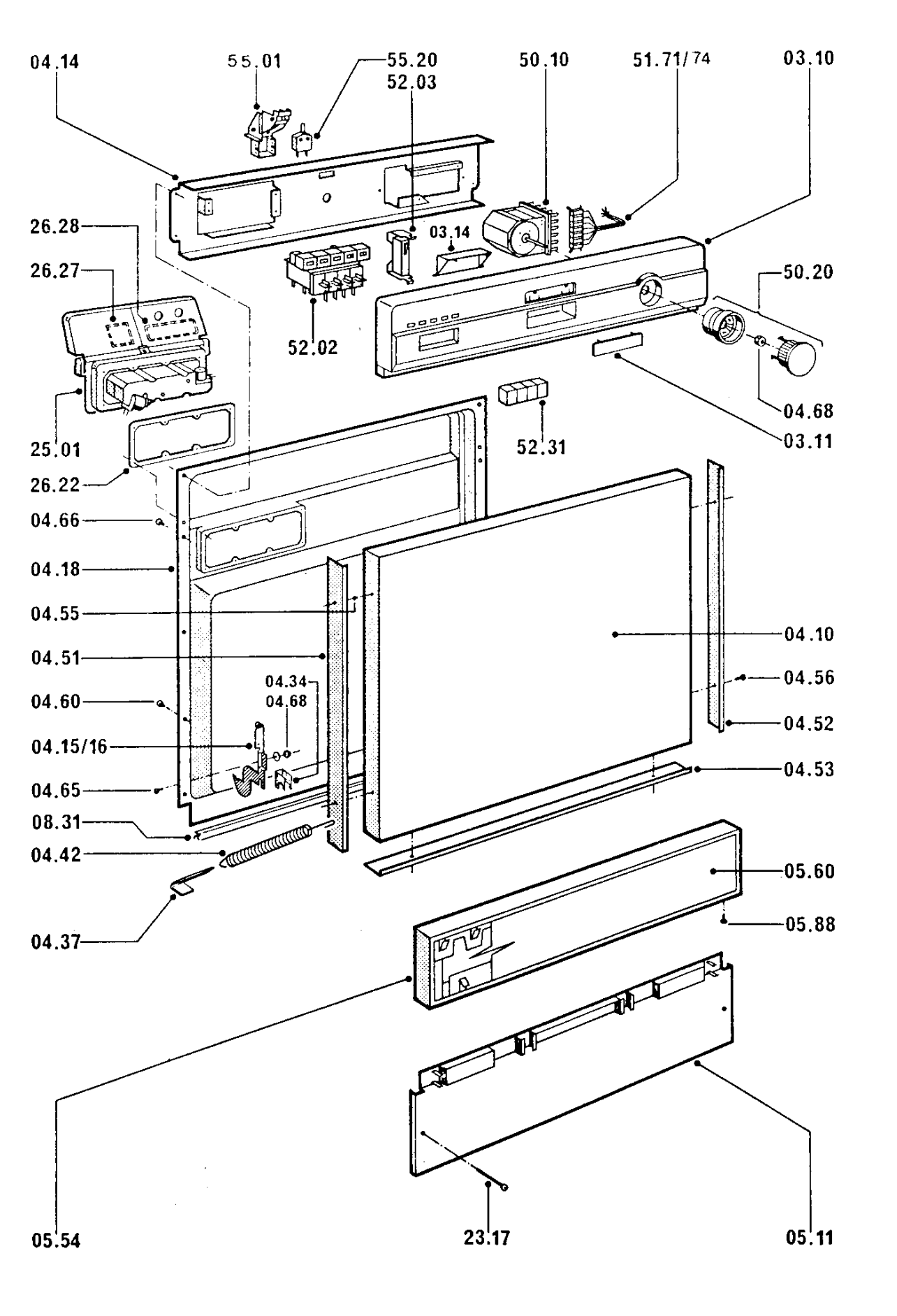
04.14
55.01
55.20
52.03
50.10
51.71/74
03.10
26.28
26.27
03.14
50.20
52.02
04.68
03.11
25.01
52.31
26.22
04.66
04.18
04.55
04.10
04.51
04.56
04.34
04.68
04.60
04.52
04.15/16
04.53
04.65
08.31
04.42
05.60
05.88
04.37
05.54
23.17
05.11

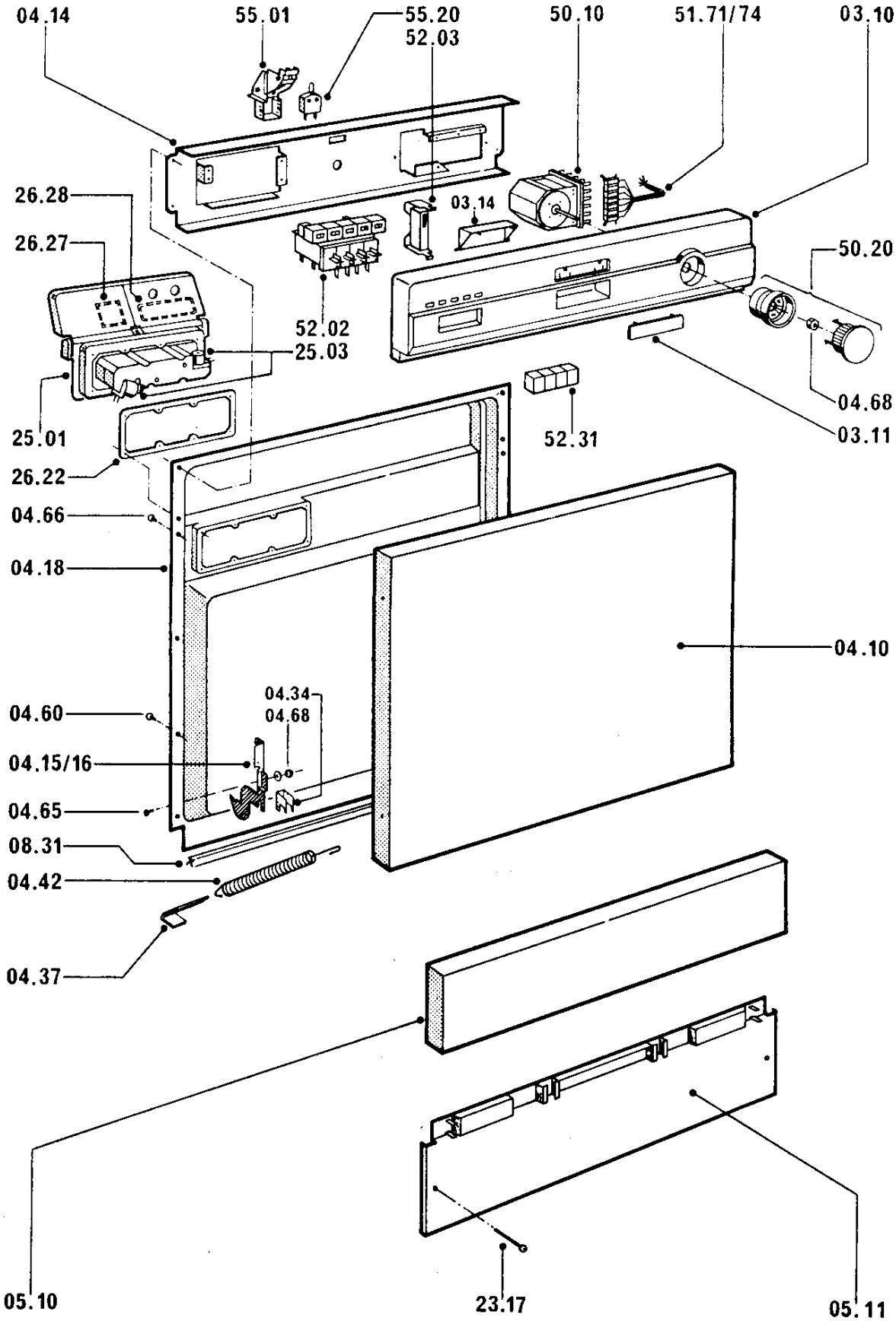
04.14
55.01
55.20
52.03
50.10
51.71/74
03.10
26.28
26.27
03.14
50.20
52.02
25.03
04.68
03.11
25.01
52.31
26.22
04.66
04.18
04.10
04.34
04.68
04.60
04.15/16
04.65
08.31
04.42
04.37
05.10
23.17
05.11

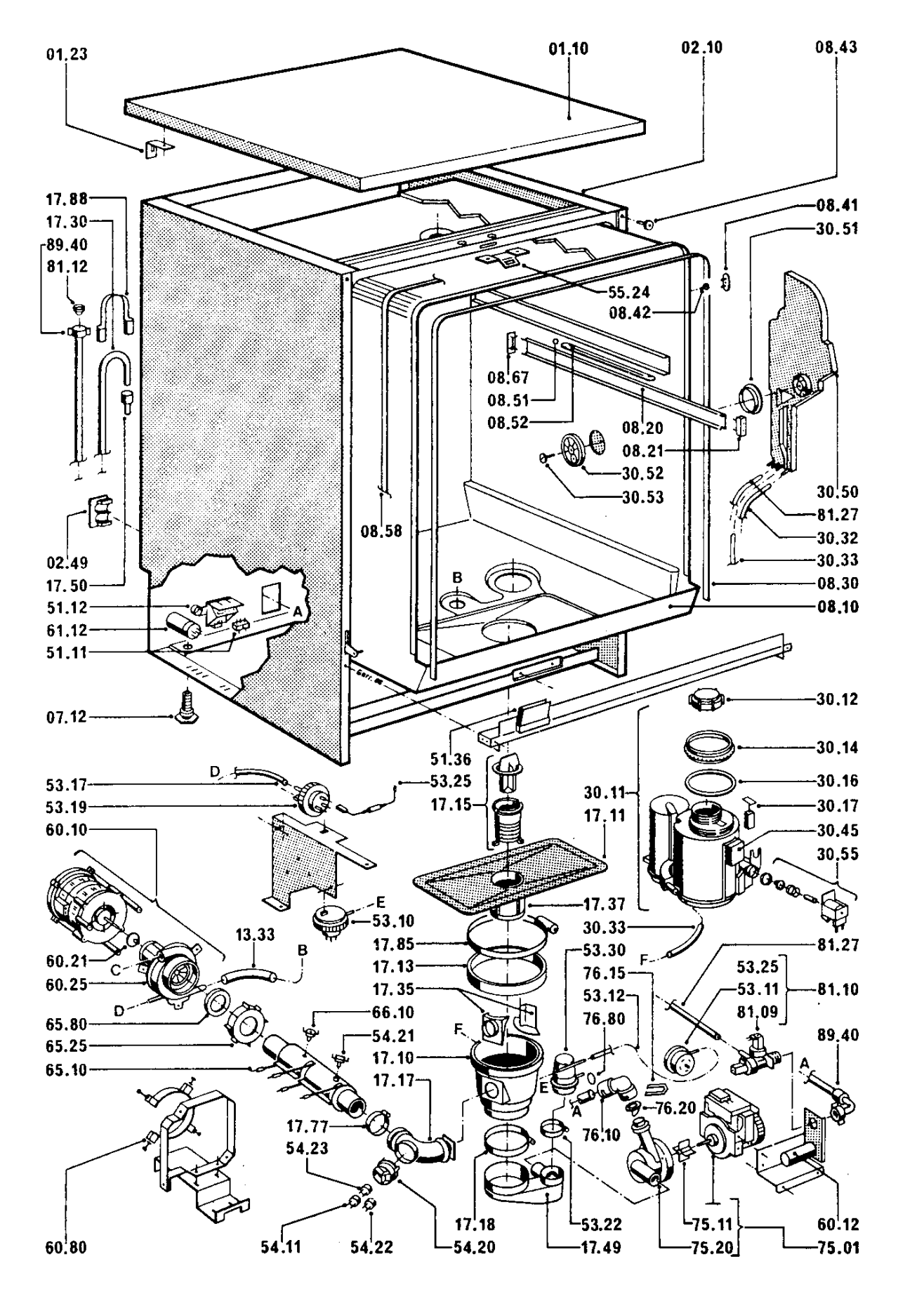
01.23
01.10
02.10
08.43
17.88
17.30
89.40
81.12
08.41
30.51
55.24
08.42
08.67
08.51
08.52
08.20
08.21
30.52
30.53
30.50
81.27
30.32
30.33
08.30
08.10
08.58
02.49
17.50
51.12
61.12
51.11
07.12
30.12
30.14
30.16
30.17
30.45
30.55
51.36
53.17
53.19
53.25
17.15
30.11
17.11
60.10
17.37
53.10
30.33
13.33
17.85
17.13
17.35
53.30
76.15
53.12
76.80
81.27
53.25
53.11
81.09
81.10
60.21
60.25
65.80
65.25
65.10
66.10
54.21
17.10
17.17
89.40
76.20
76.10
17.77
54.23
60.80
54.11
54.22
54.20
17.18
17.49
53.22
75.20
75.11
60.12
75.01

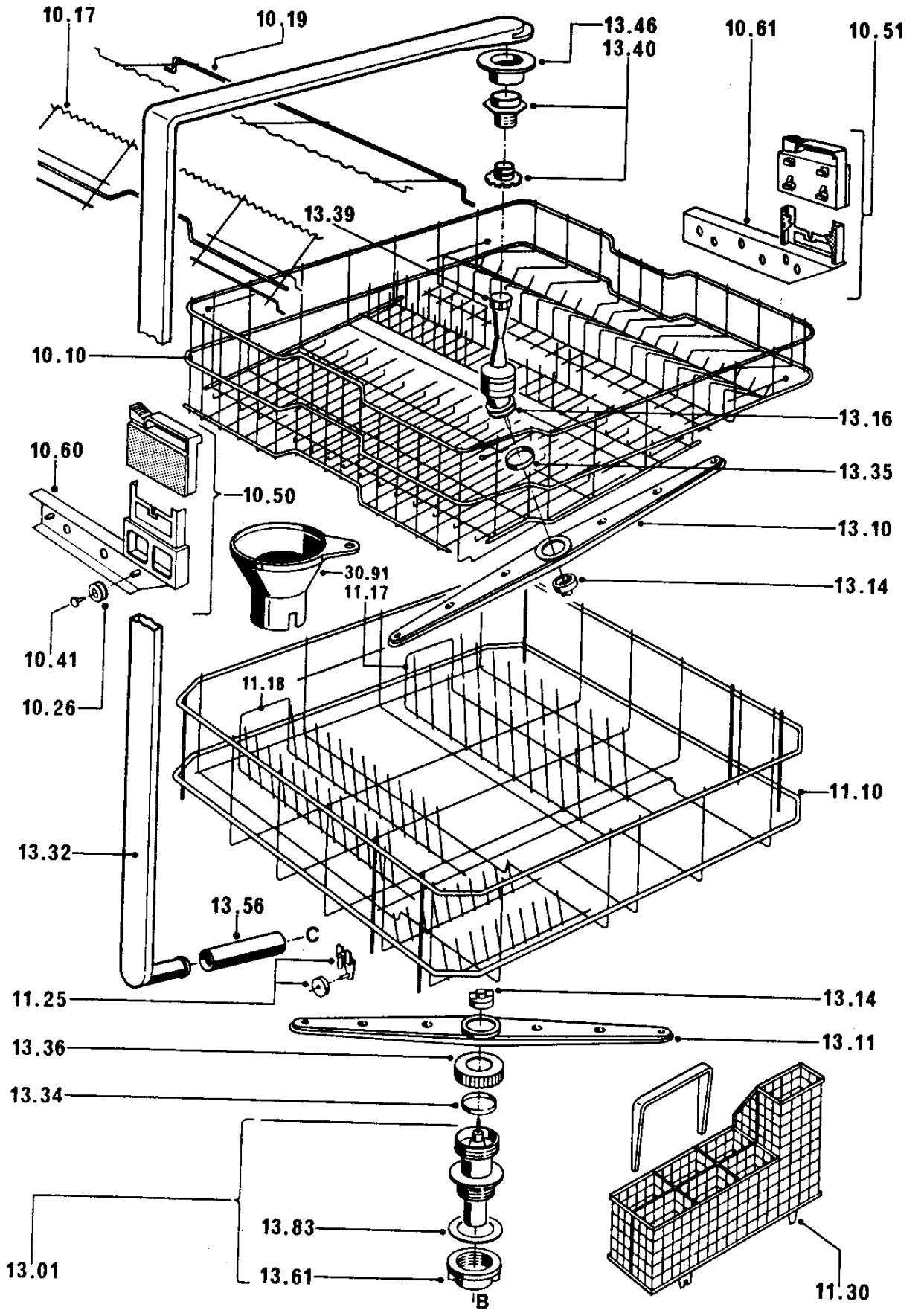
10.17
10.19
13.46
13.40
10.61
10.51
13.39
10.10
13.16
10.60
13.35
10.50
13.10
30.91
11.17
13.14
10.41
10.26
11.18
11.10
13.32
13.56
C
11.25
13.14
13.36
13.11
13.34
13.83
13.01
13.61
B
11.30