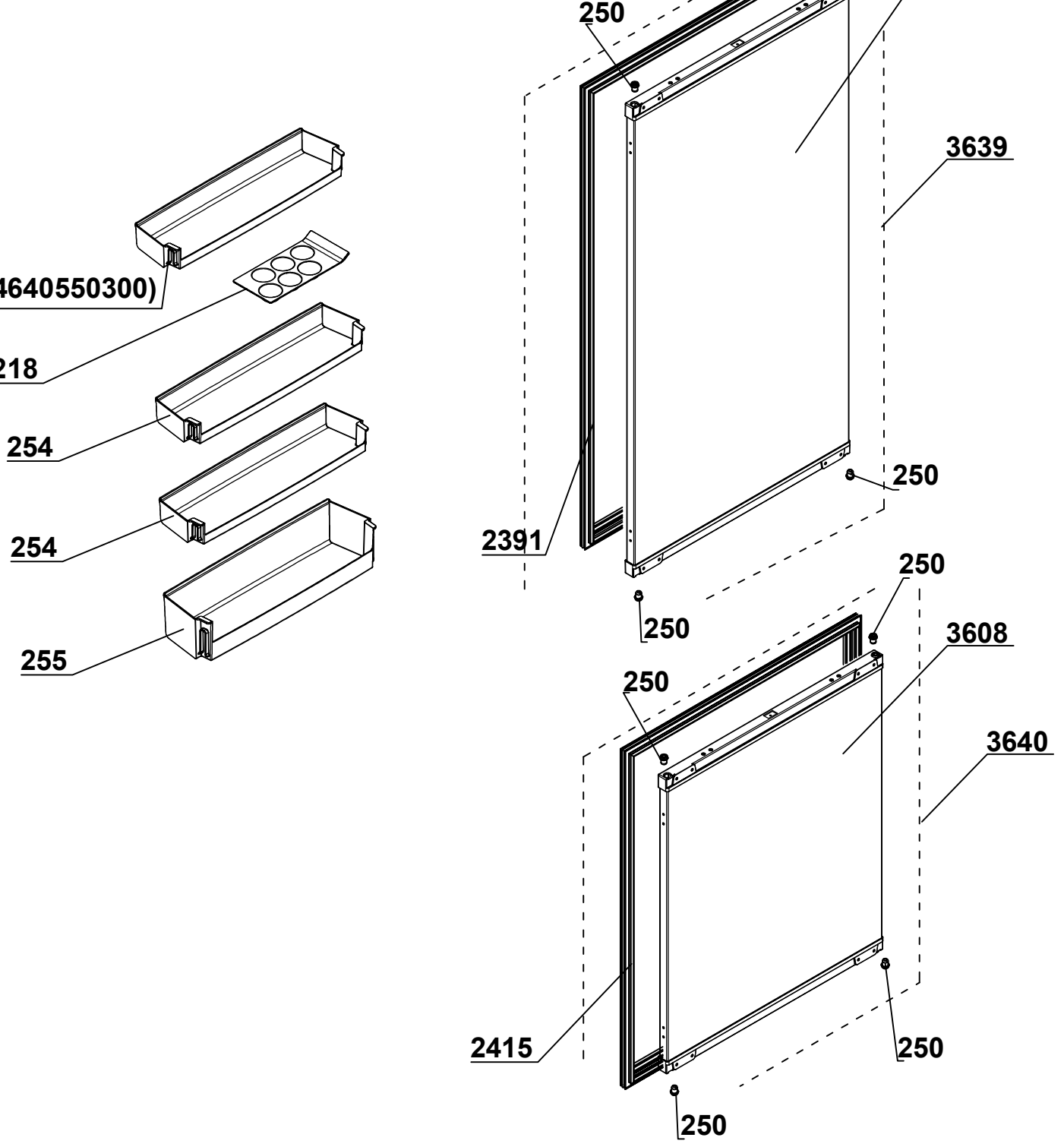
250
3639
4640550300)
218
254
254
255
250
2391
250
250
3608
250
3640
2415
250
250

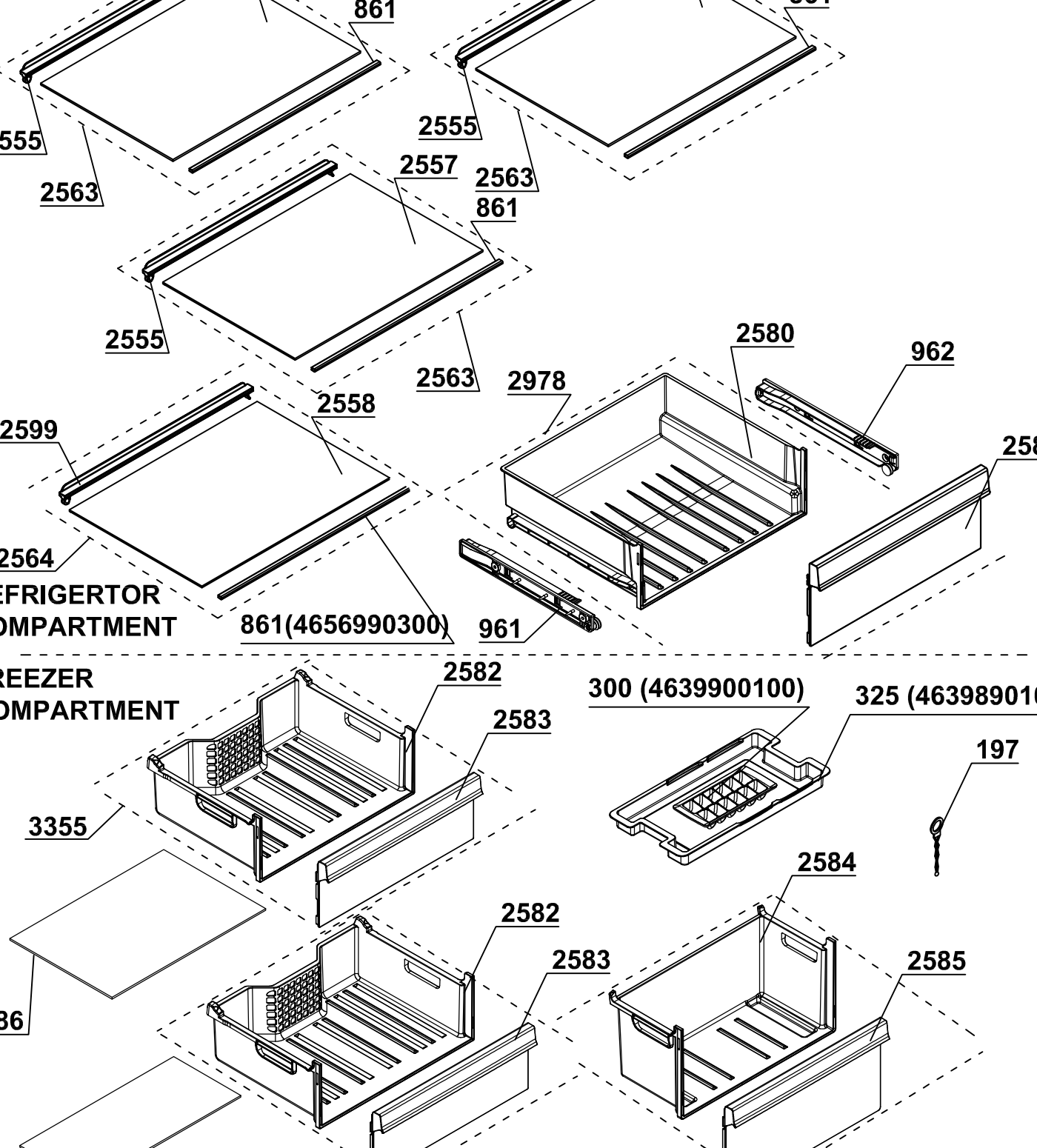
861
555
2563
2555
2563
861
2557
2555
2563
2580
962
2978
2558
2599
2564
EFRIGERTOR
OMPARTMENT
861(4656990300)
961
REEZER
OMPARTMENT
2582
2583
300 (4639900100)
325 (46398901
197
3355
2584
2582
2583
2585
86

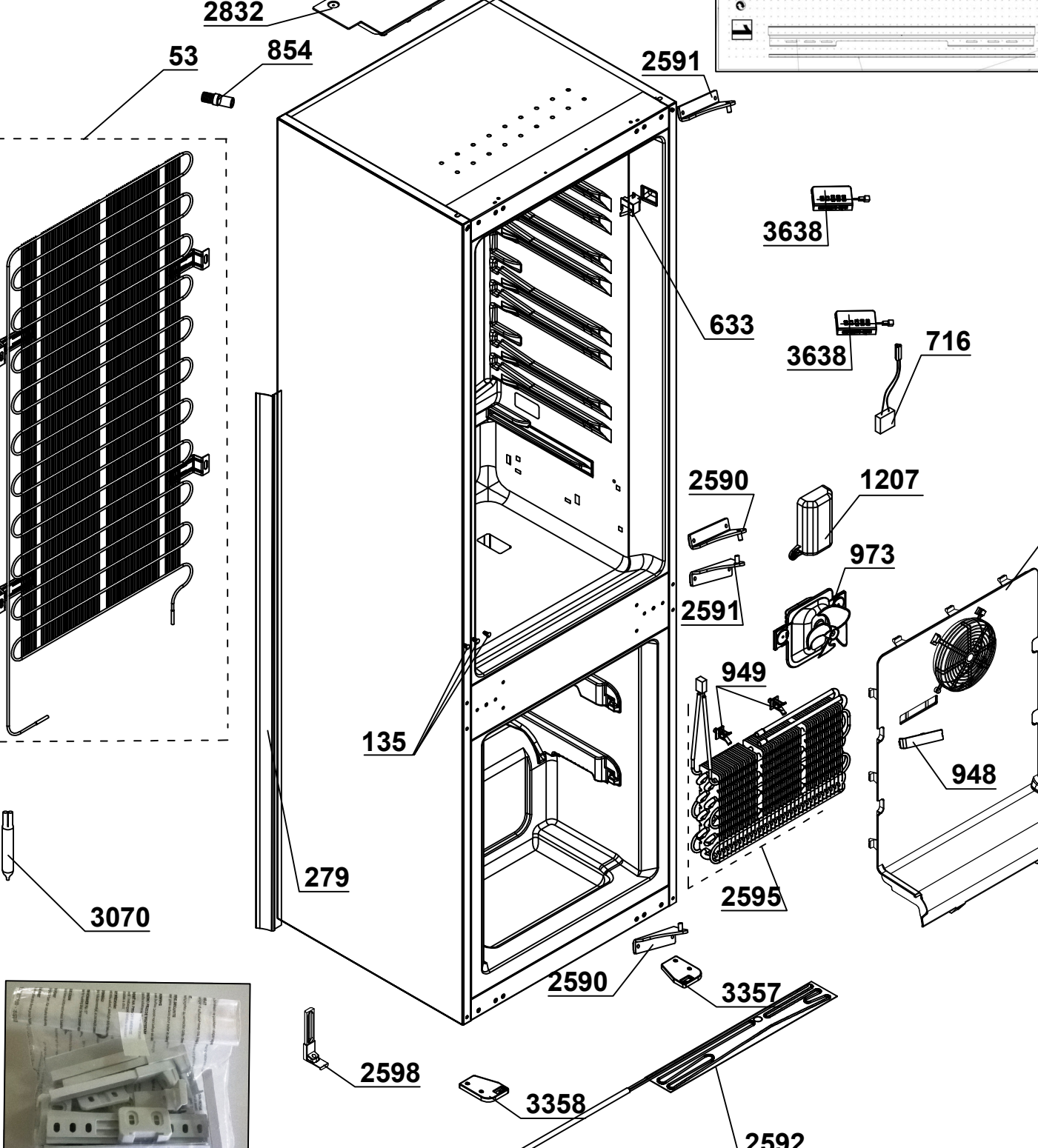
2832
53
854
2591
3638
633
3638
716
2590
1207
973
2591
949
135
948
279
2595
3070
2590
3357
2598
3358
2592

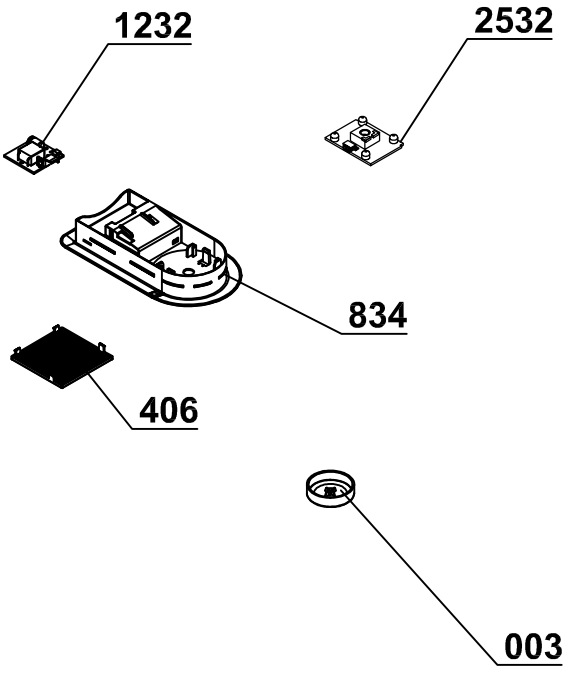
1232
2532
834
406
003

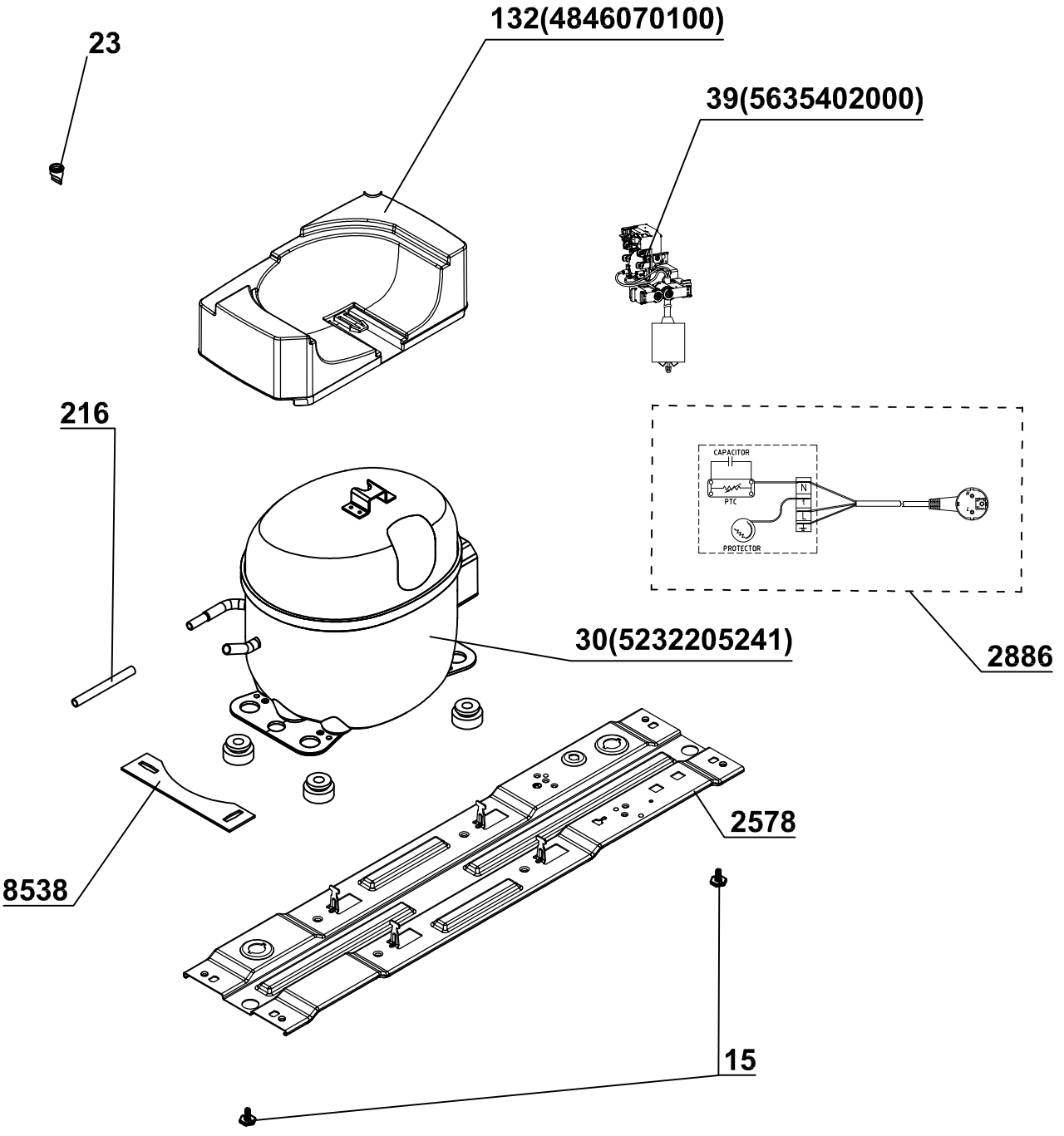
23
132(4846070100)
39(5635402000)
216
CAPACITOR
PTC
PROTECTOR
N
L
30(5232205241)
2886
2578
8538
15

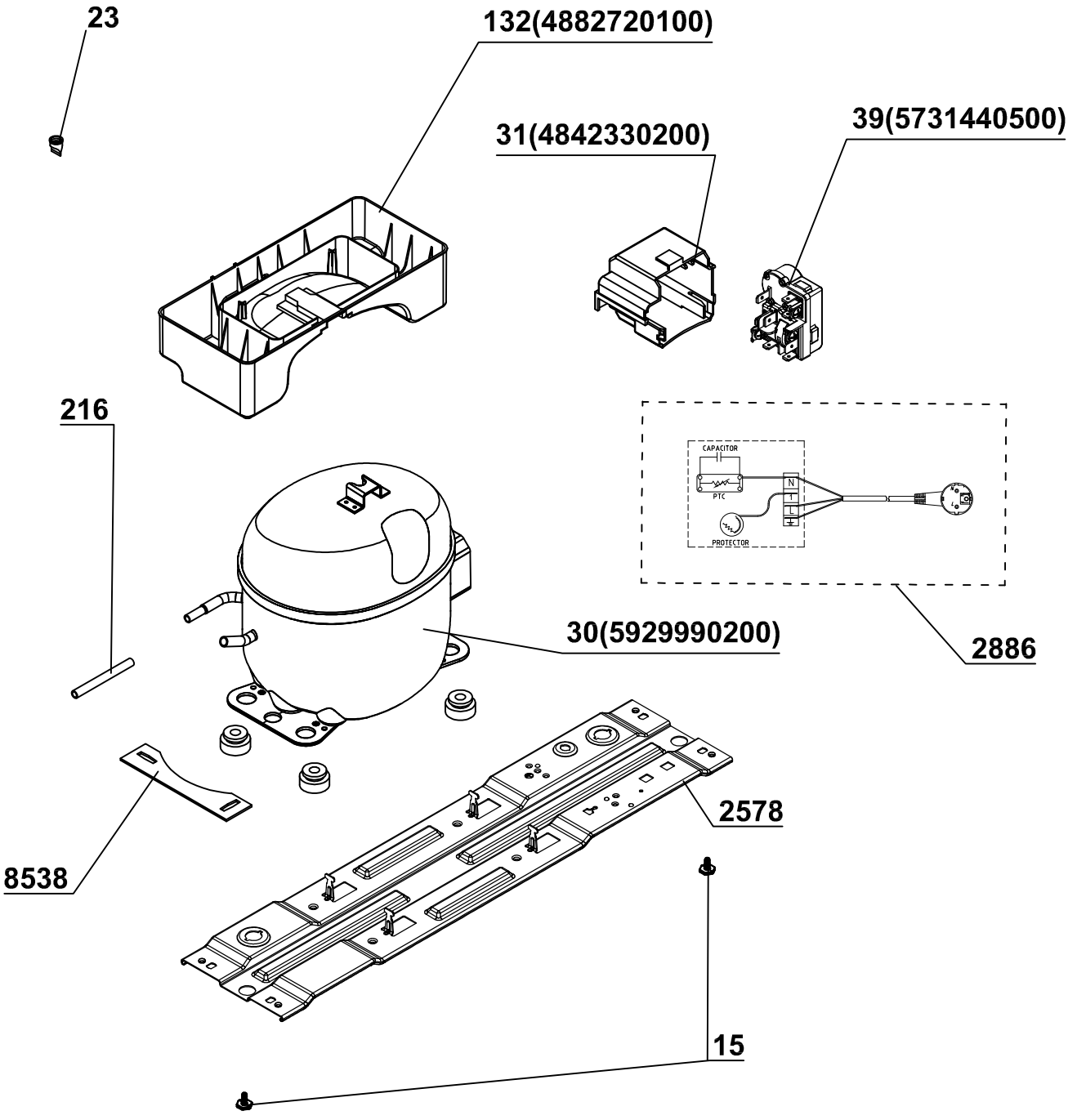
23
132(4882720100)
31(4842330200)
39(5731440500)
216
CAPACITOR
PTC
PROTECTOR
N
L
30(5929990200)
2886
2578
8538
15