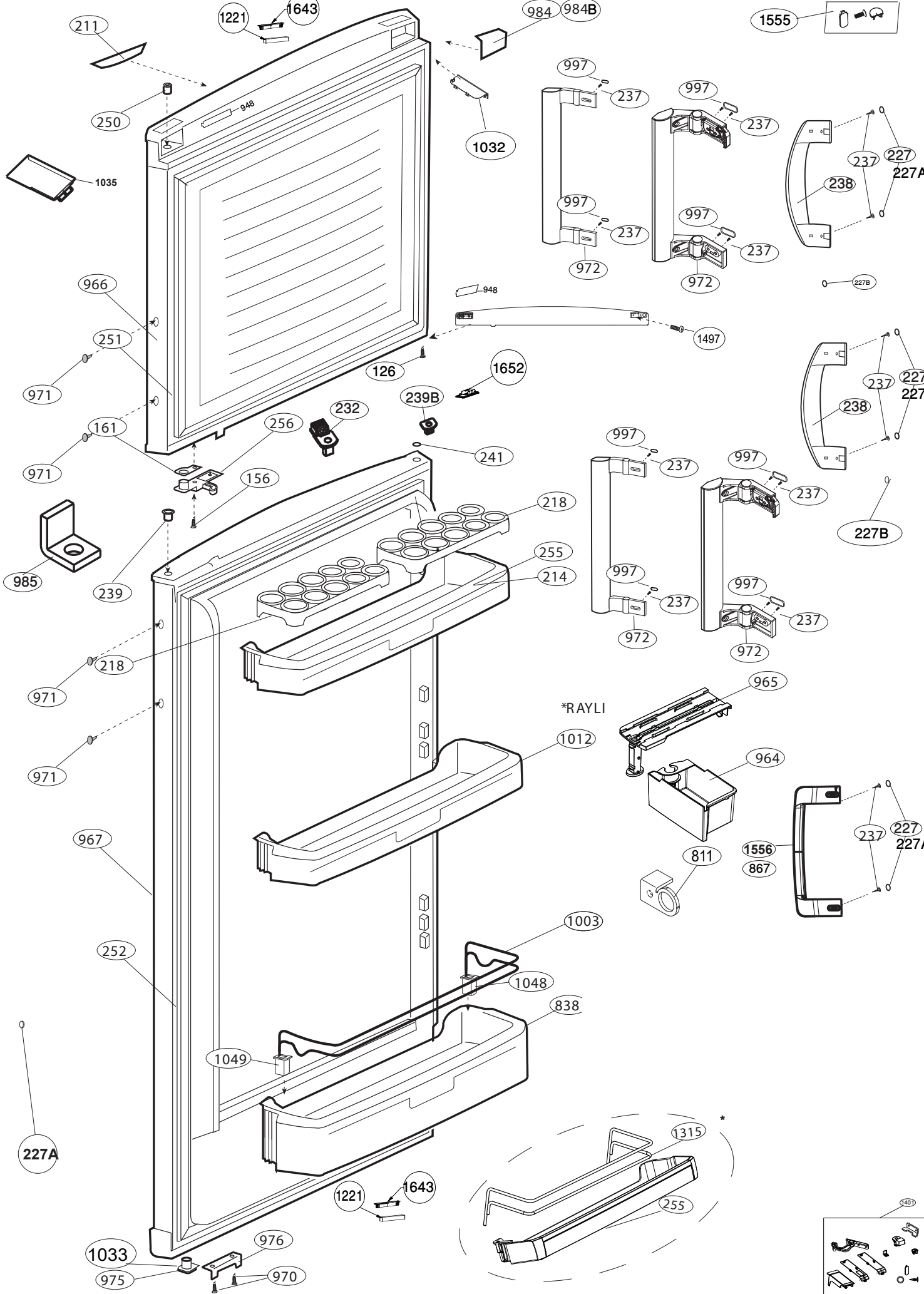

211
1221
1643
984
984B
1555
250
948
1032
1035
997
237
997
237
237
227
227A
238
997
237
997
237
972
972
227B
966
948
1497
251
126
1652
971
239B
232
161
256
241
971
156
218
985
239
255
214
997
237
997
237
227B
997
237
997
237
972
972
218
971
965
*RAYLI
1012
964
971
967
811
1556
867
237
227
227A
1003
252
1048
838
1049
227A
1315
*
1221
1643
255
1401
1033
976
975
970

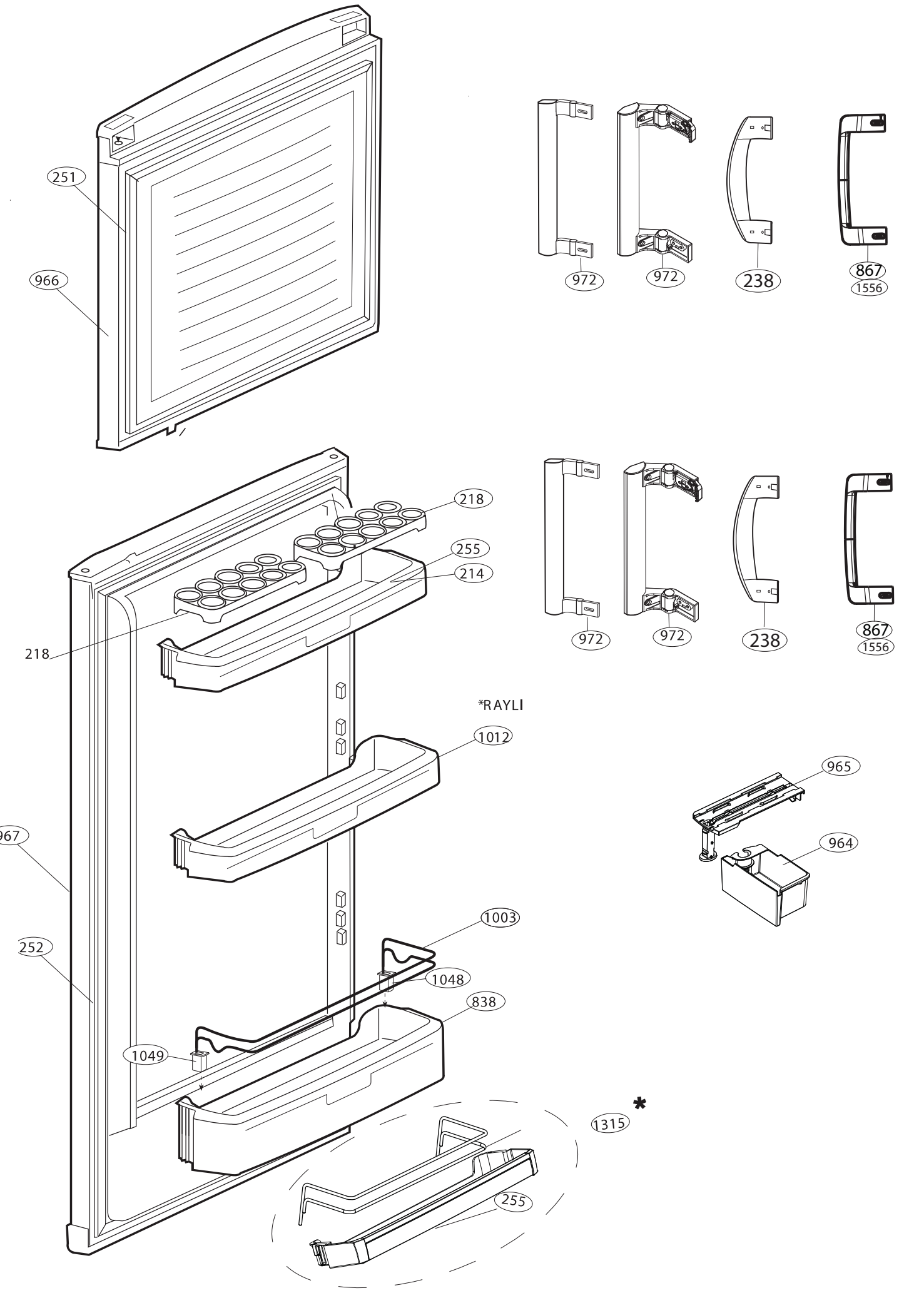
251
966
972
972
238
867
1556
218
255
214
218
*RAYLI
1012
965
964
967
1003
252
1048
838
1049
1315
*
255

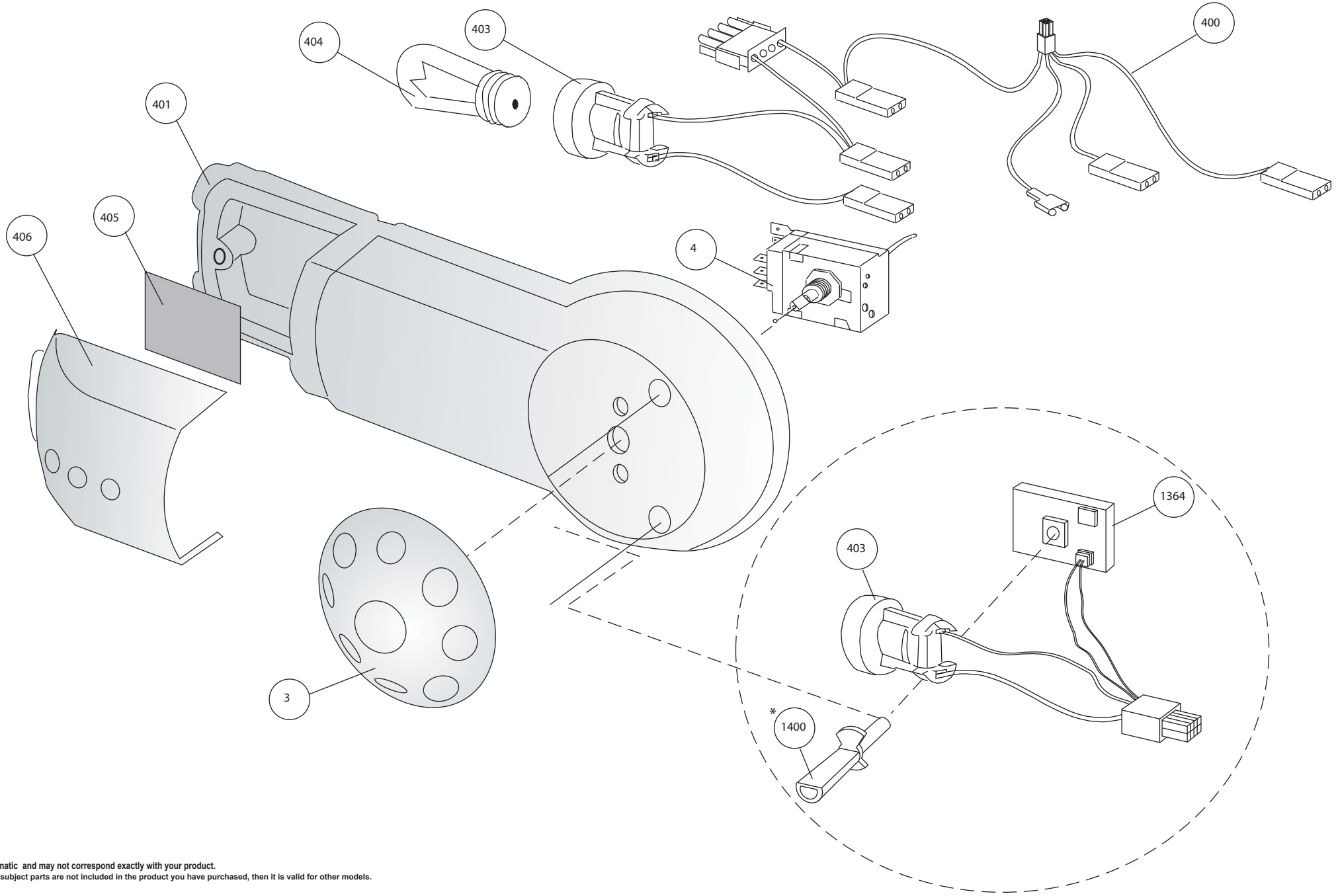

schematic and may not correspond exactly with your product.
If the subject parts are not included in the product you have purchased, then it is valid for other models.

‹ZEN : UUR E‹LMEZBAfi	TAR‹H : 06.03.2002	ONAY : H. IYIGUN	‹LG‹L‹ MODELLER :	AMPUL-TERMOSTAT KUTUSU / KARDELEN P 620, P 650, P 660, P 670, P 680, P 690, P 461	RES‹M NO : 369	REV‹ZYON : 08	REV. TAR‹H‹ : 02.09.2009

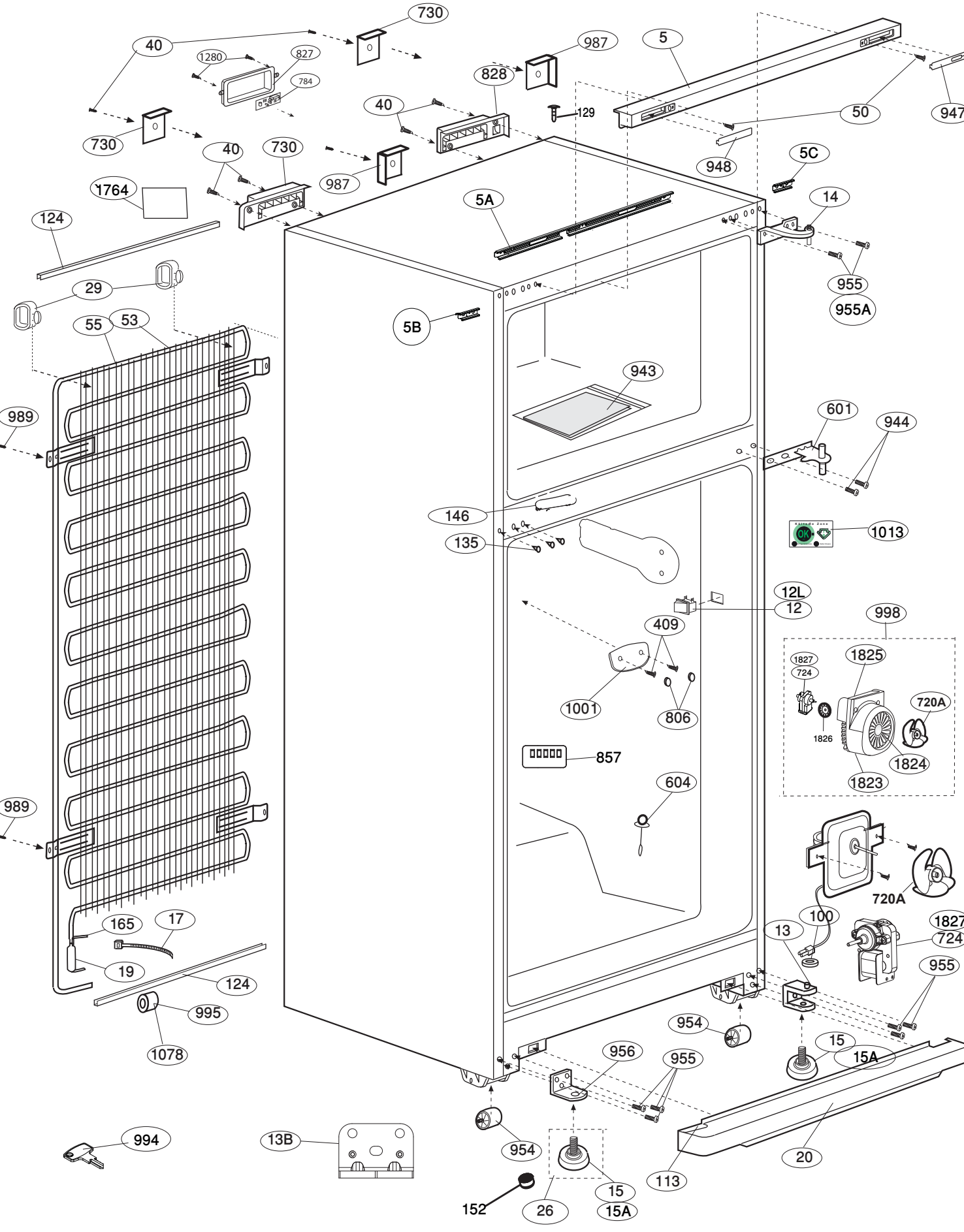

NOTES:Figures that take place in this instruction manual are schematic and may not correspond exactly with your product.
If the subject parts are not included in the product you have purchased, then it is valid for other models.

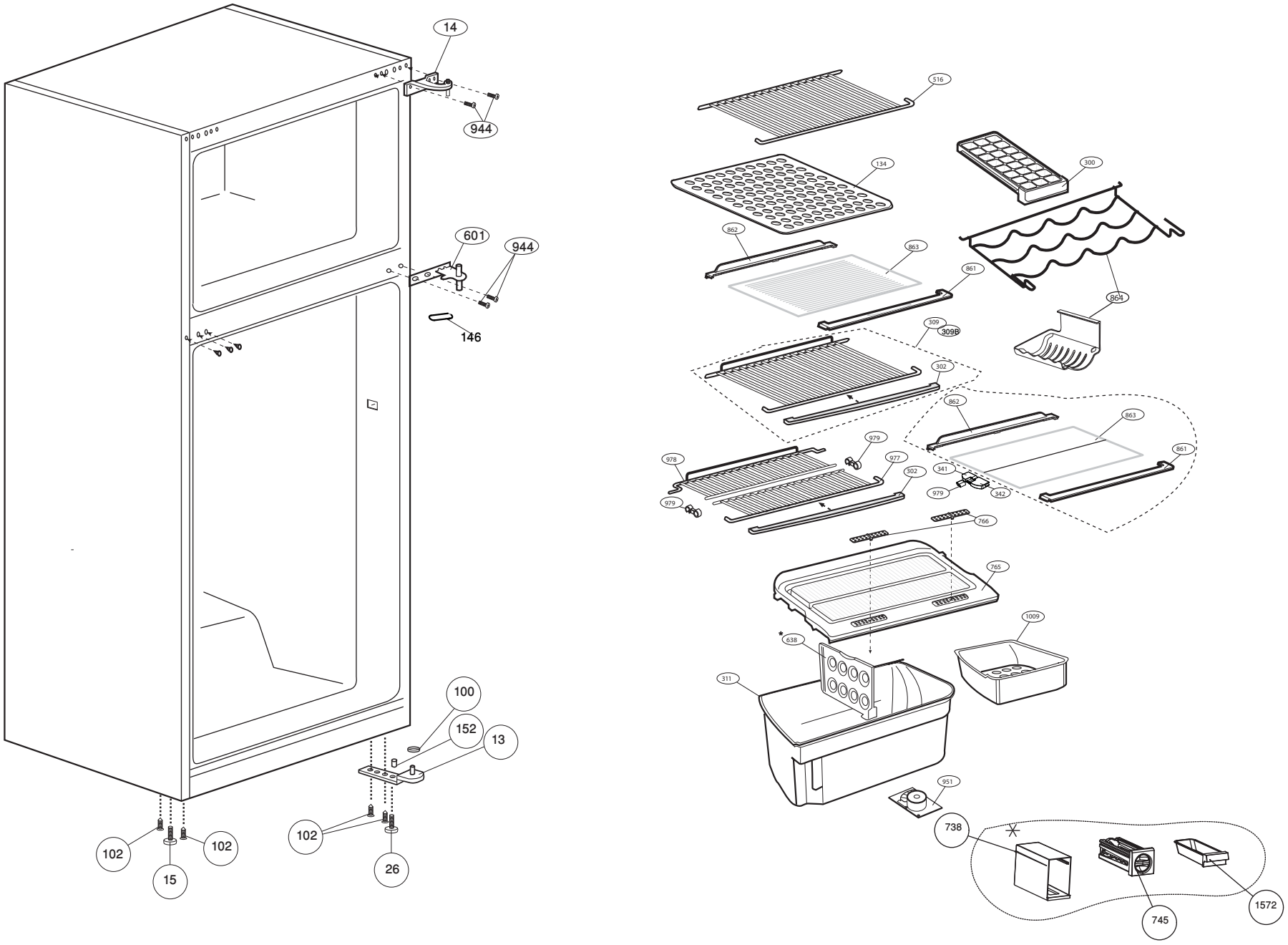
14
944
601
944
146
102
102
15
102
26
100
152
13
516
134
300
862
863
861
864
309
309B
302
862
863
861
979
978
977
302
341
979
342
979
766
765
1009
638
311
951
738
745
1572

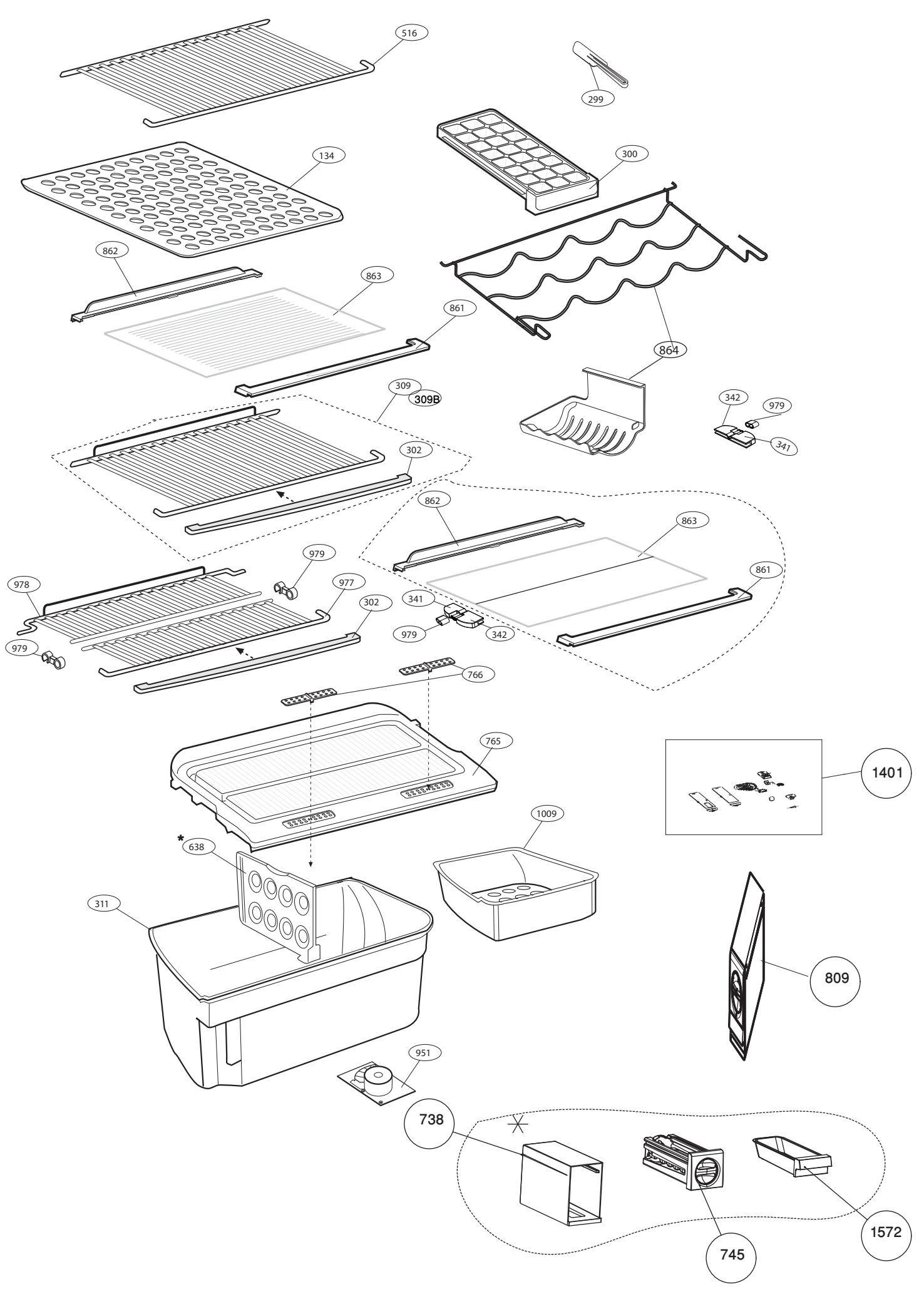
516
299
134
300
862
863
861
864
309
309B
342
979
341
302
862
863
861
979
978
977
302
341
979
342
979
766
765
1401
1009
*
638
311
809
951
738
745
1572

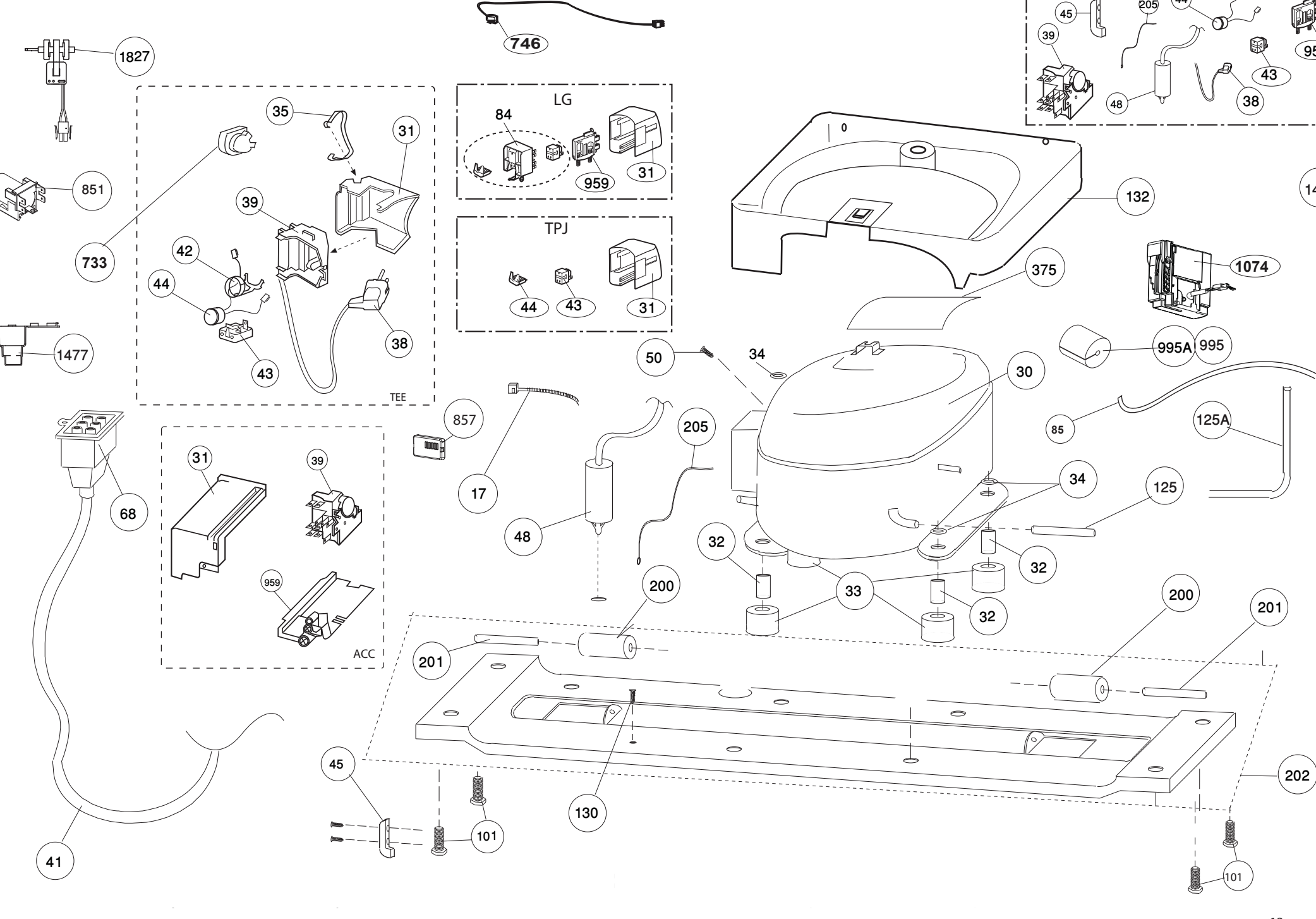

746
1827
851
733
1477
35
31
39
42
44
43
38
TEE
LG
84
959
31
TPJ
44
43
31
132
375
1074
995A
995
50
34
30
85
125A
857
17
205
48
34
125
32
33
32
32
200
200
201
201
68
31
39
959
ACC
45
101
130
202
101
41
45
39
205
43
48
38