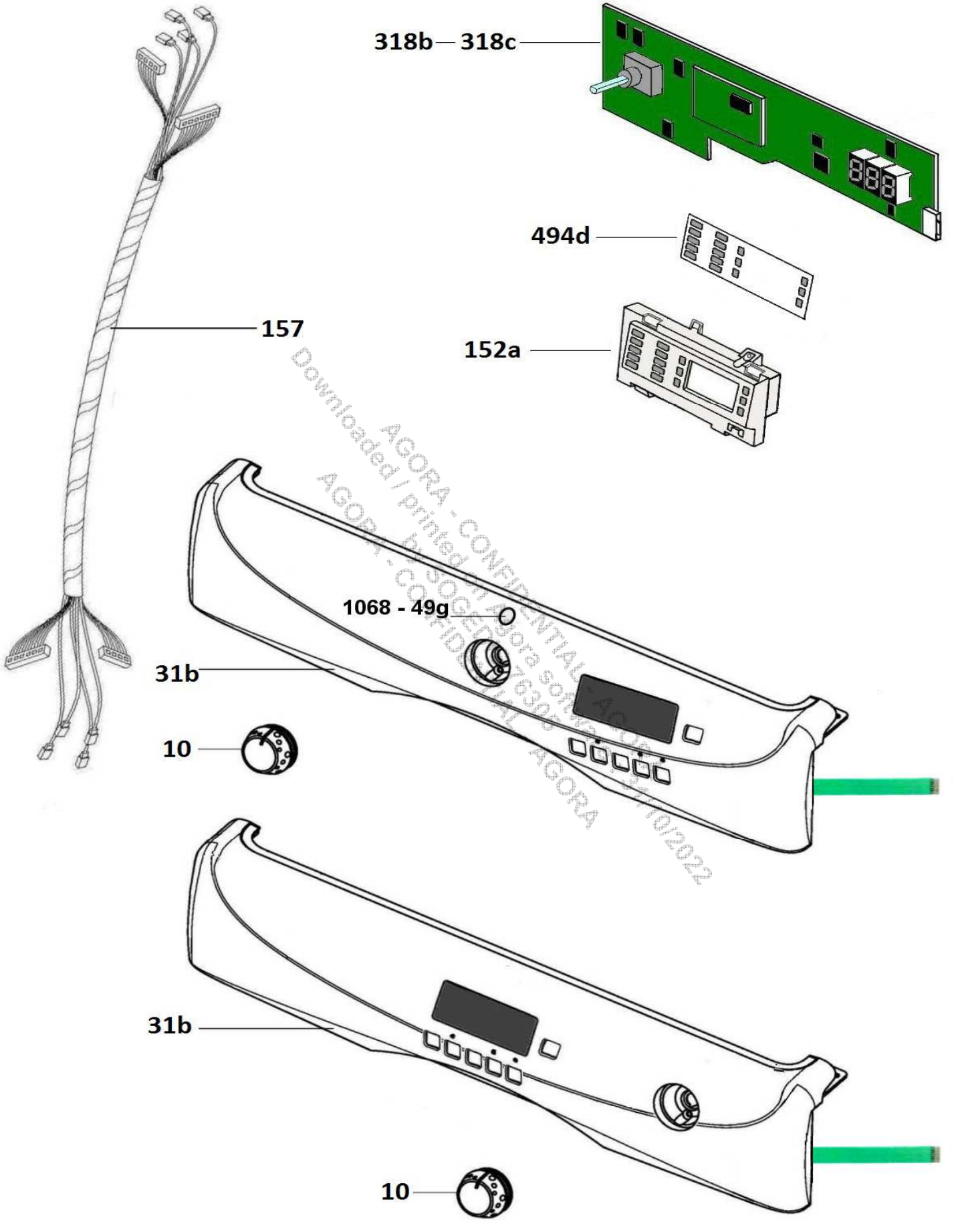

AGORA - CONFIDENTIAL - AGORA
Downloaded / printed on Agora software - 24/10/2022
by SOGEDI 76305
AGORA - CONFIDENTIAL - AGORA

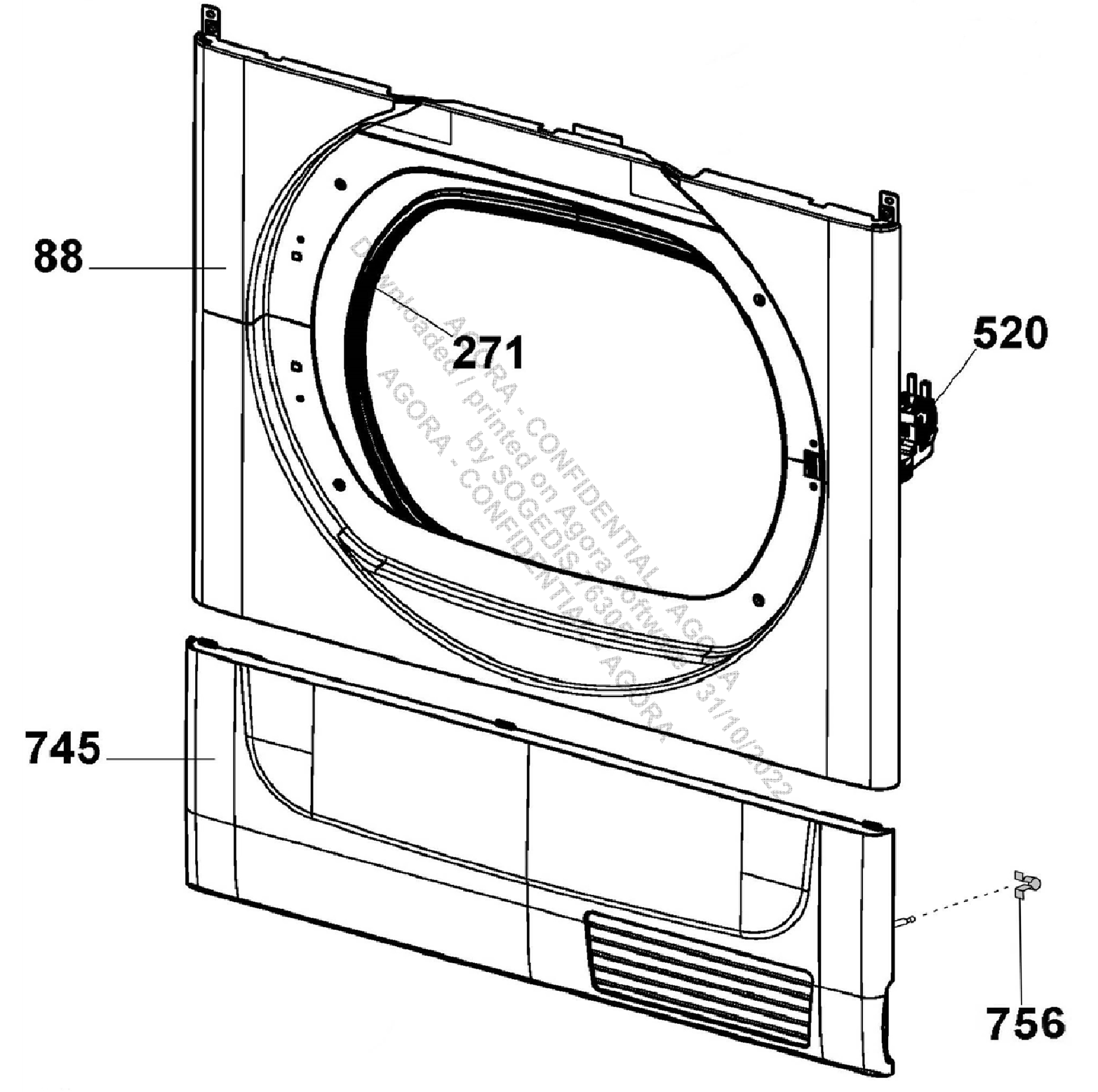
88
271
520
745
756

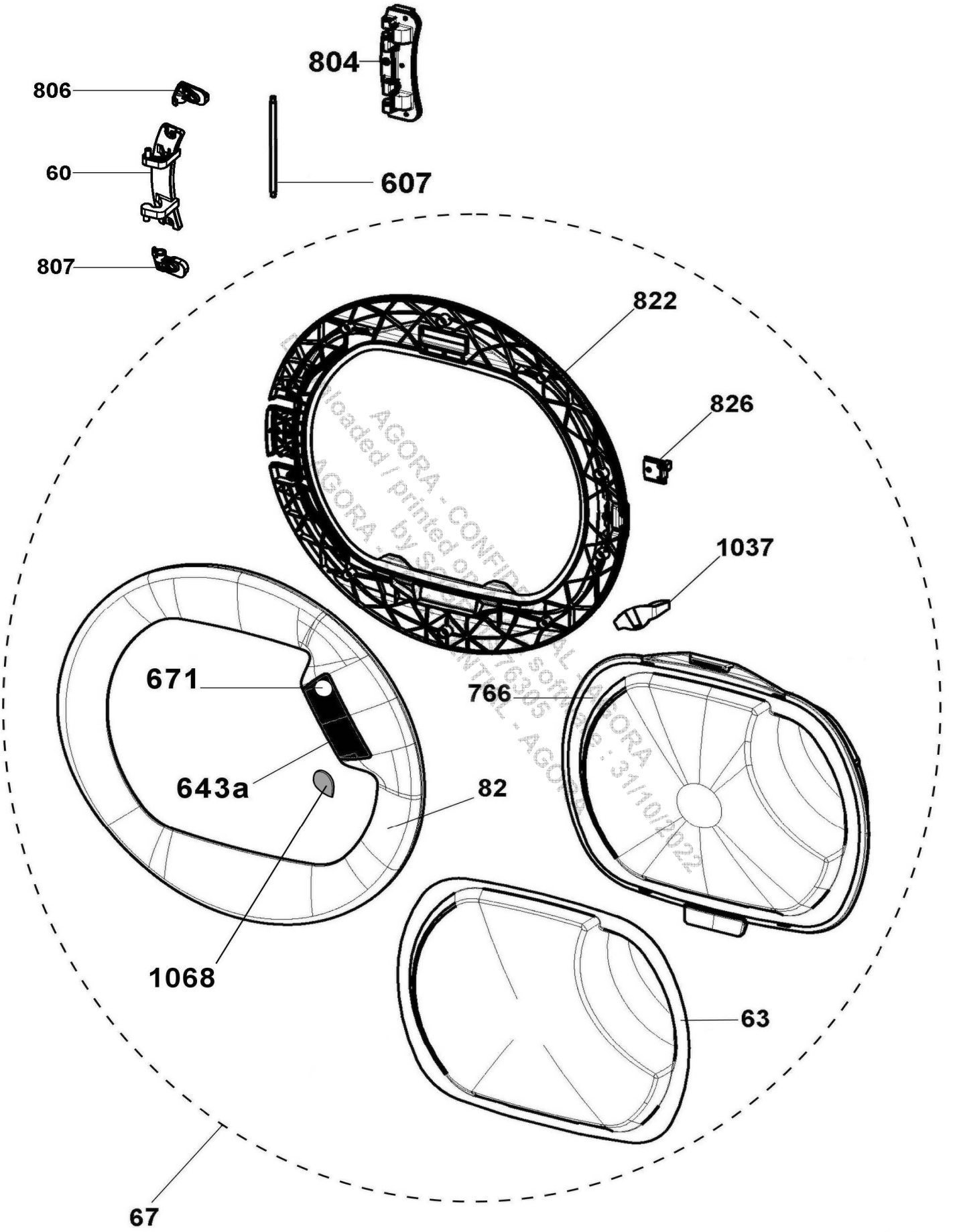
804
806
607
60
807
822
826
1037
671
766
643a
82
1068
63
67

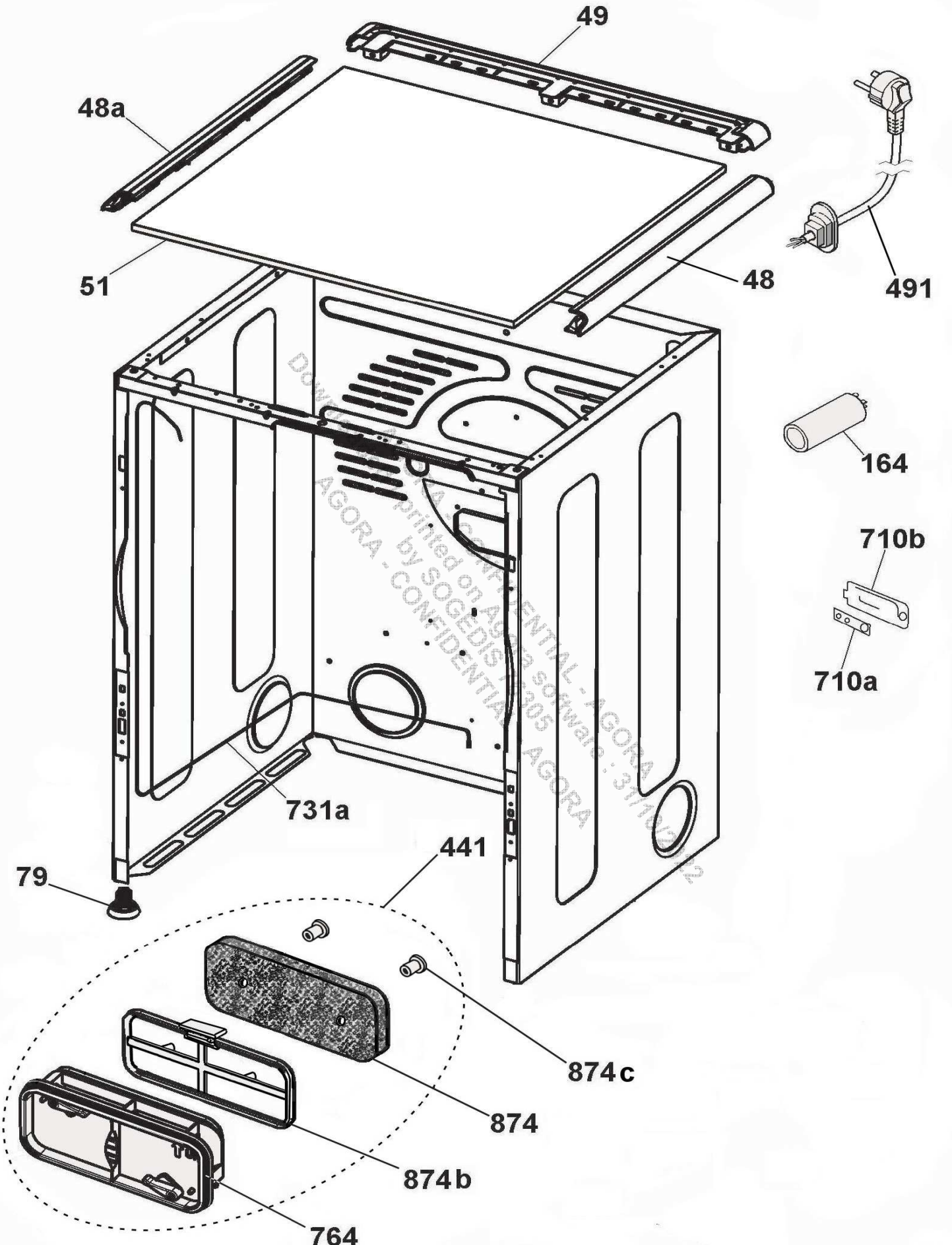
49
48a
51
48
491
164
710b
710a
731a
441
79
874c
874
874b
764

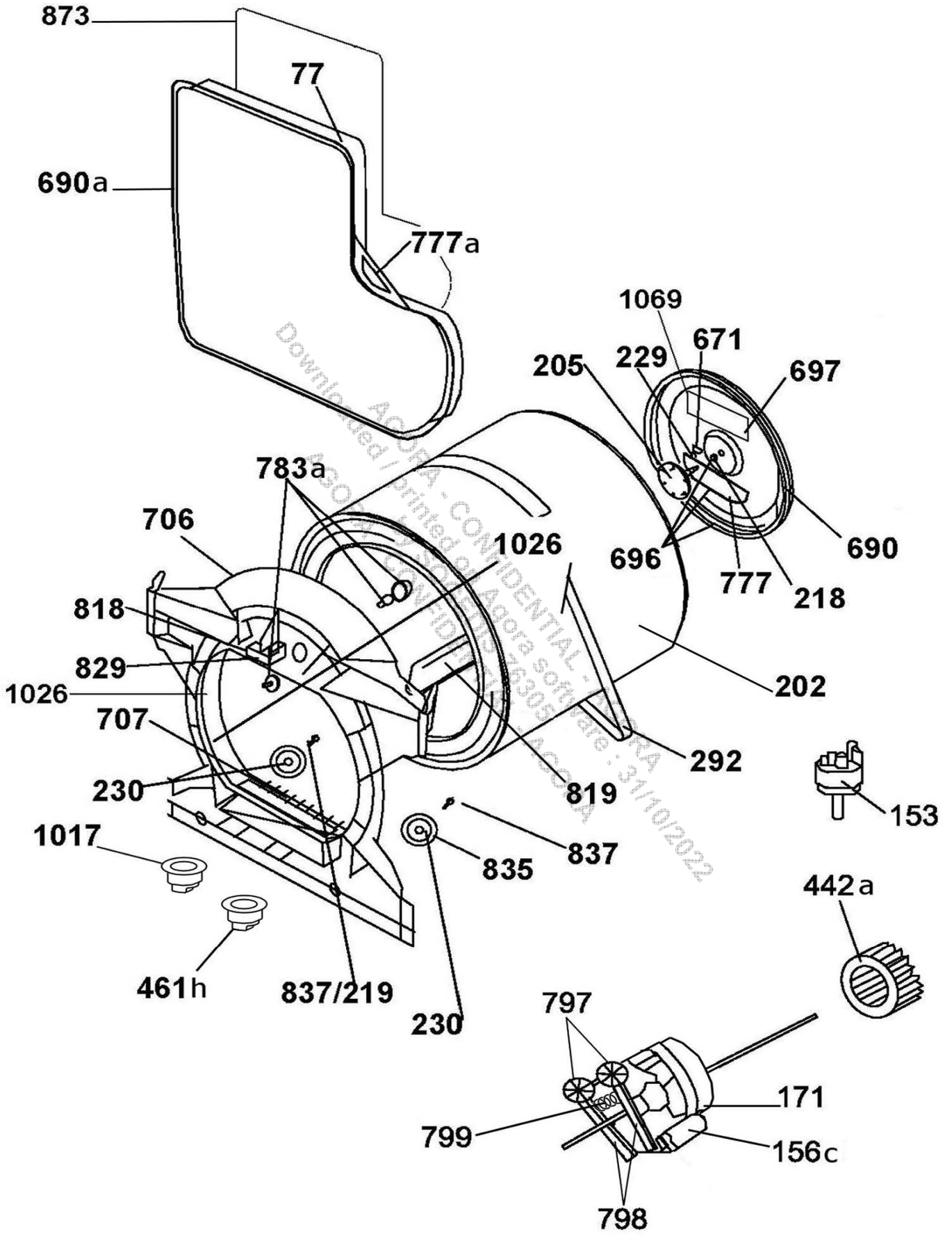
873
77
690a
777a
1069
671
229
205
697
783a
706
1026
696
690
777
218
818
829
1026
707
202
292
230
819
153
1017
837
835
442a
461h
837/219
230
797
171
799
156c
798

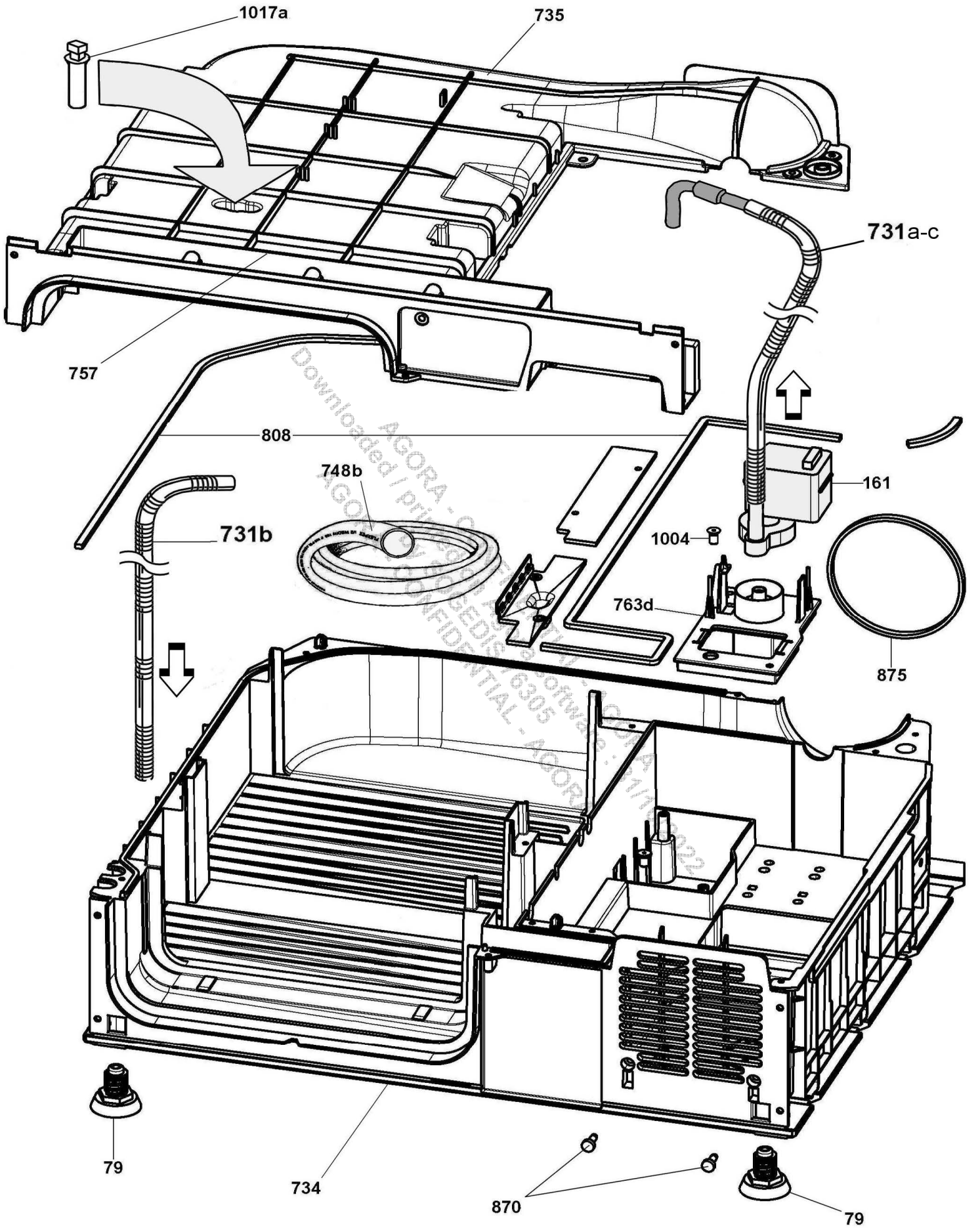
1017a
735
731a-c
757
808
748b
161
731b
1004
763d
875
79
734
870
79

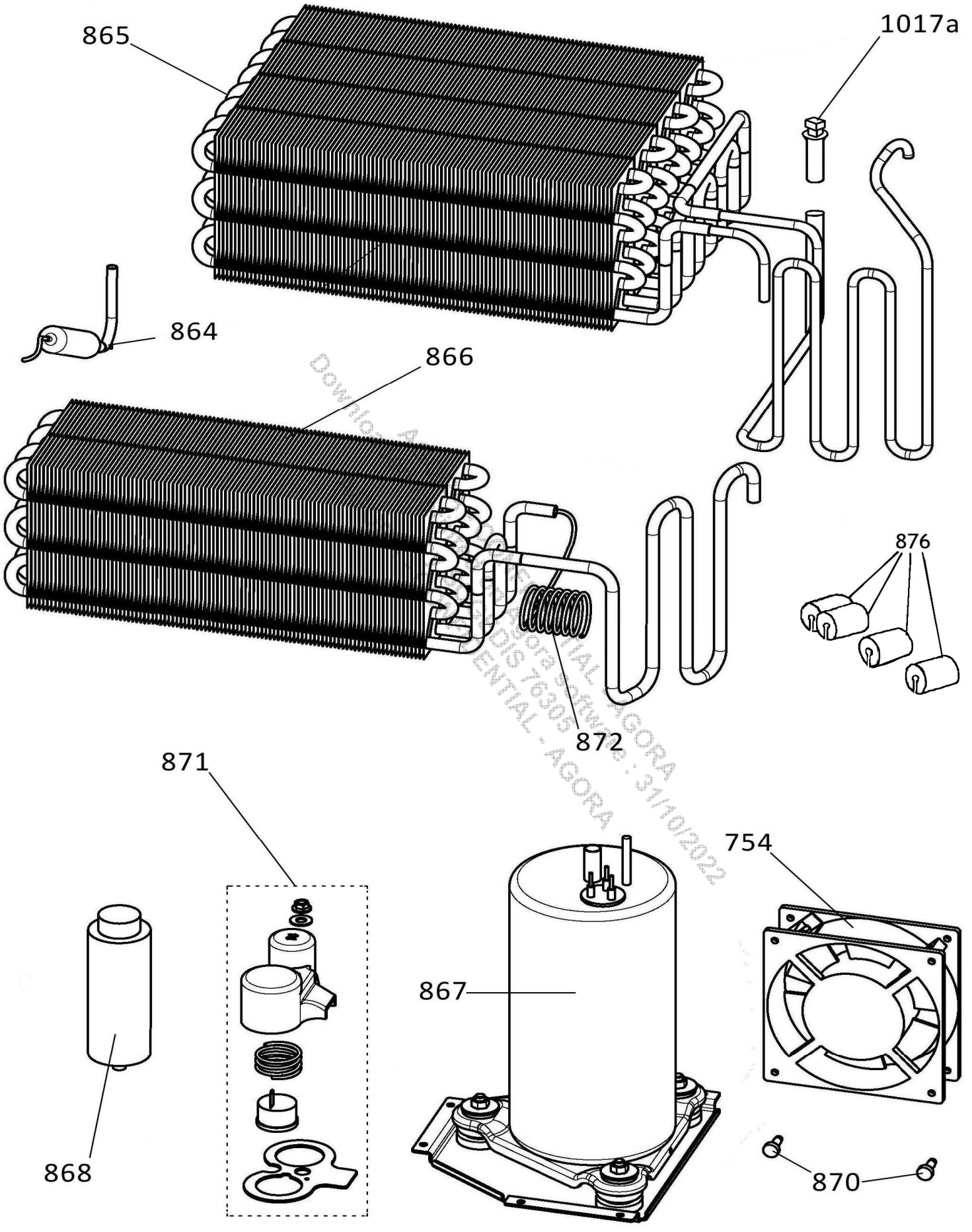
865
1017a
864
866
876
872
871
754
867
868
870