## DOOR ASSEMBLY

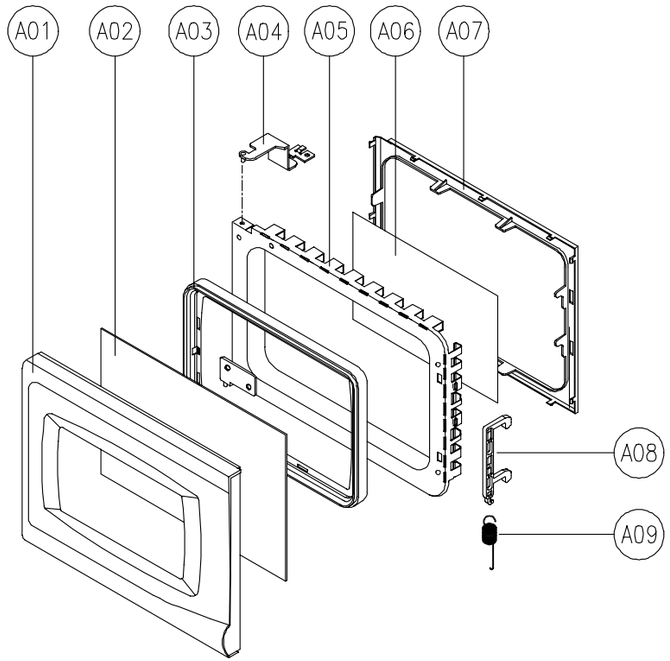


## CONTROL PANEL ASSEMBLY

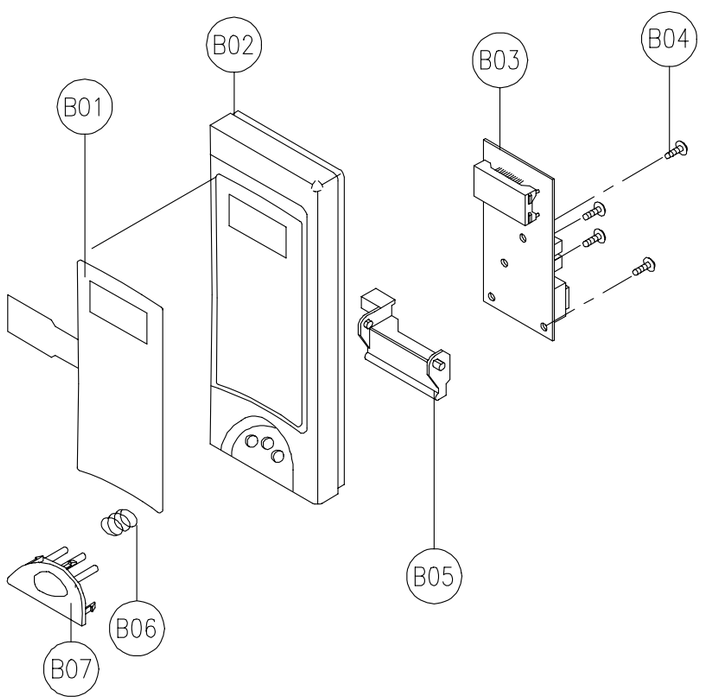

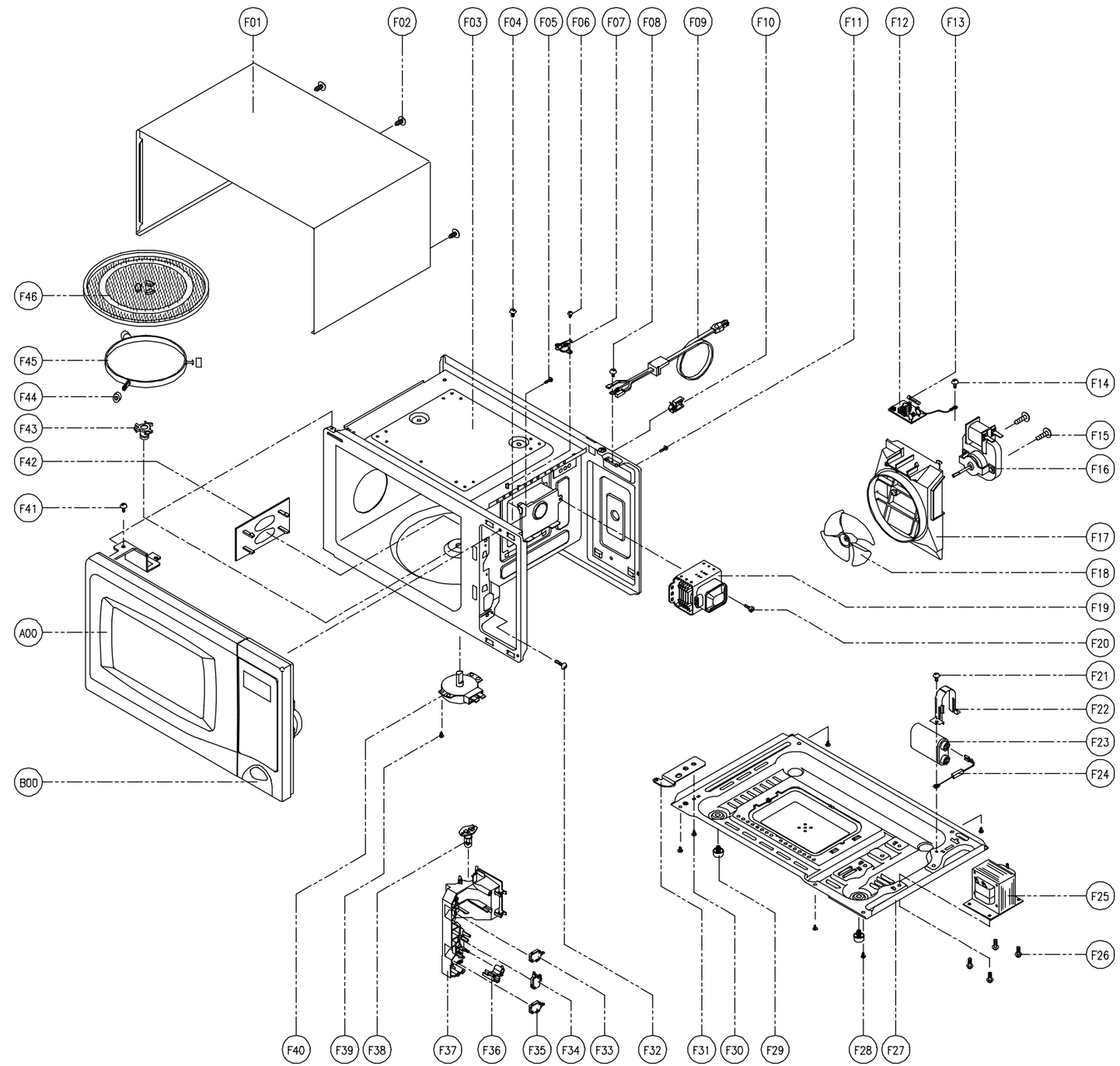
## TOTAL ASSEMBLY