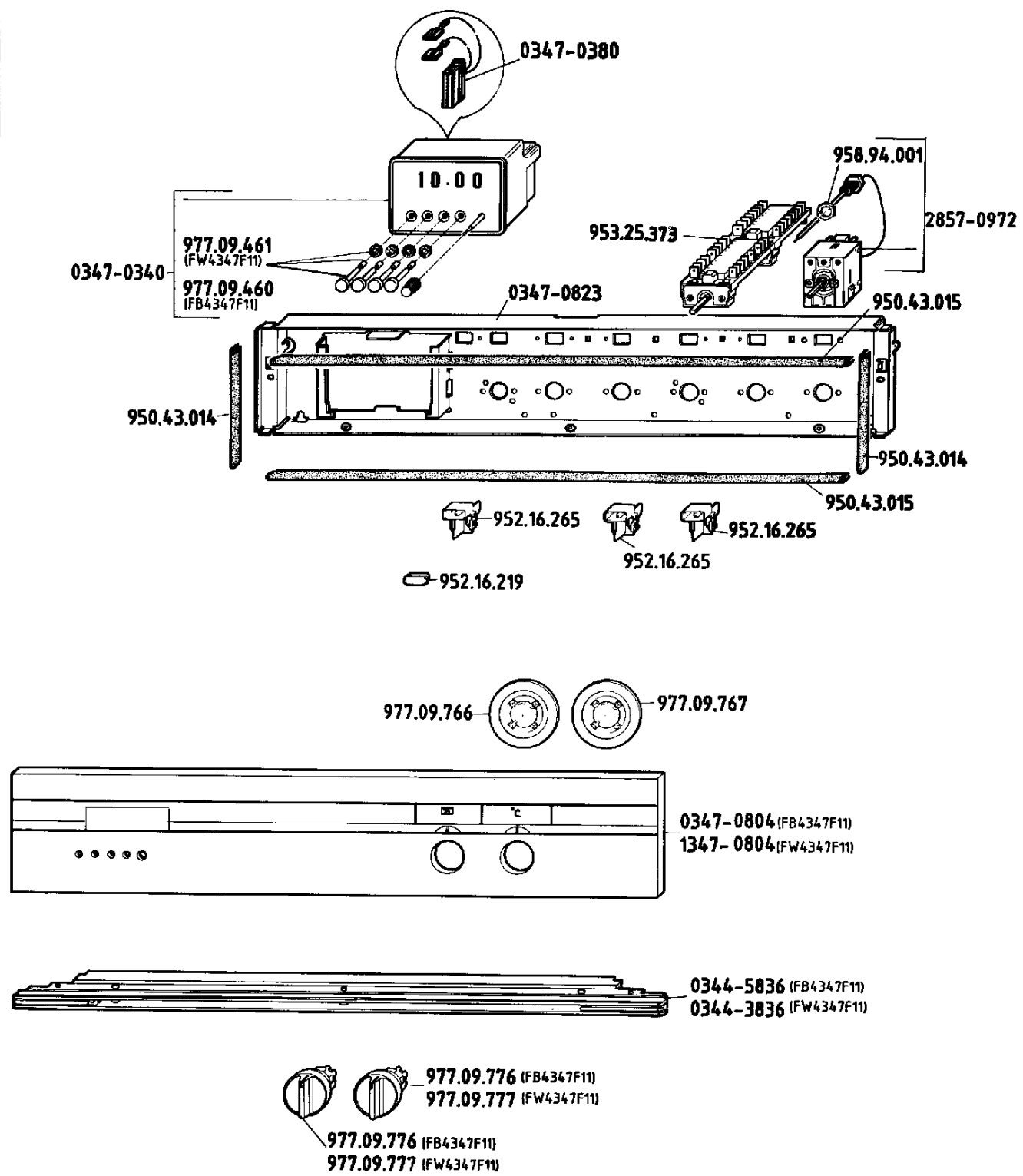
0347-0380
10.00
958.94.001
2857-0972
953.25.373
977.09.461
(FW4347F11)
0347-0340
977.09.460
(FB4347F11)
0347-0823
950.43.015
950.43.014
950.43.014
950.43.015
952.16.265
952.16.265
952.16.265
952.16.219
977.09.766
977.09.767
°C
0347-0804 (FB4347F11)
1347-0804 (FW4347F11)
0344-5836 (FB4347F11)
0344-3836 (FW4347F11)
977.09.776 (FB4347F11)
977.09.777 (FW4347F11)
977.09.776 (FB4347F11)
977.09.777 (FW4347F11)

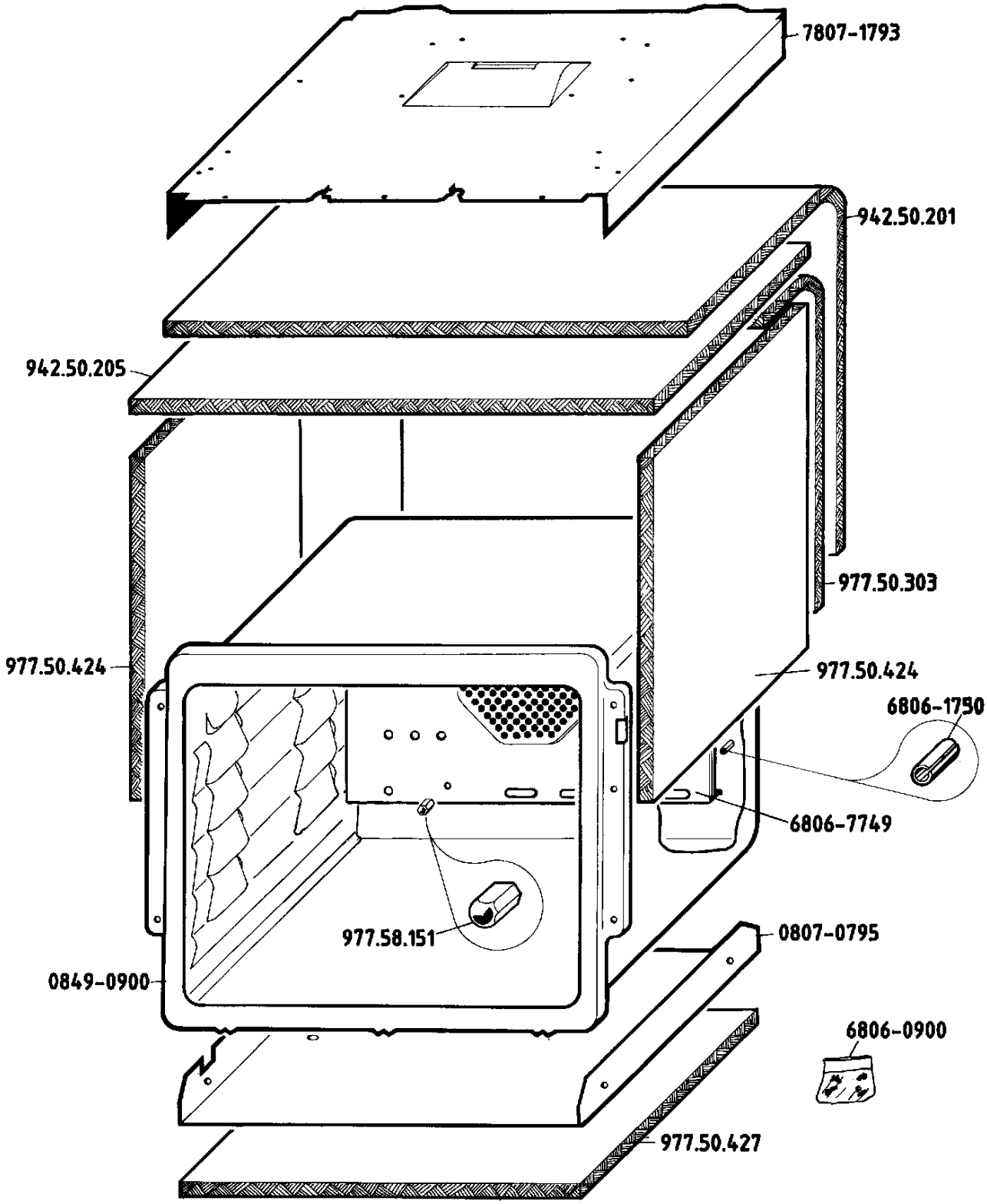
7807-1793
942.50.201
942.50.205
977.50.303
977.50.424
977.50.424
6806-1750
6806-7749
977.58.151
0807-0795
0849-0900
6806-0900
977.50.427

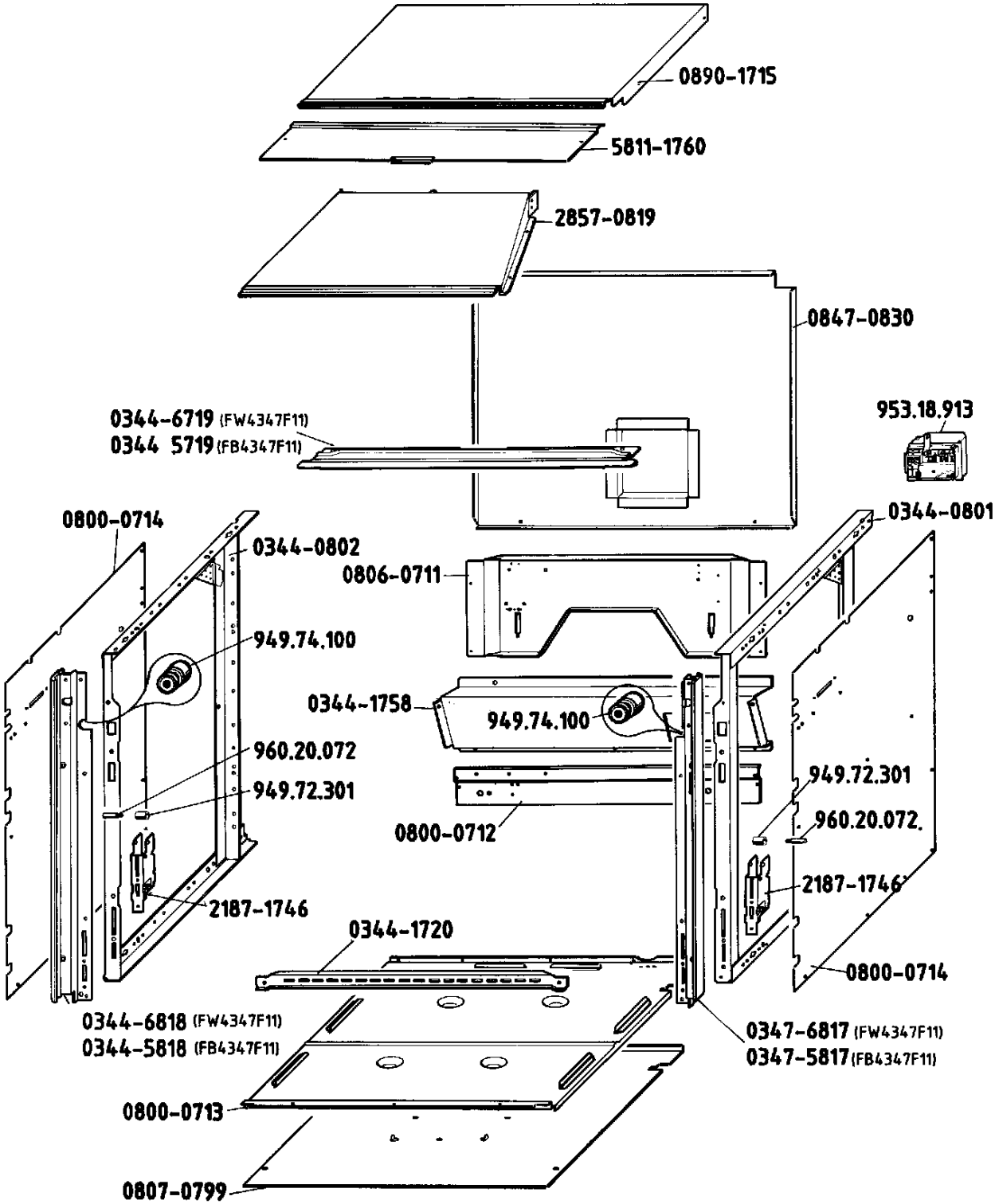
0890-1715
5811-1760
2857-0819
0847-0830
0344-6719 (FW4347F11)
0344 5719 (FB4347F11)
953.18.913
0800-0714
0344-0802
0344-0801
0806-0711
949.74.100
0344-1758
949.74.100
960.20.072
949.72.301
949.72.301
960.20.072
0800-0712
2187-1746
2187-1746
0344-1720
0800-0714
0344-6818 (FW4347F11)
0344-5818 (FB4347F11)
0347-6817 (FW4347F11)
0347-5817 (FB4347F11)
0800-0713
0807-0799

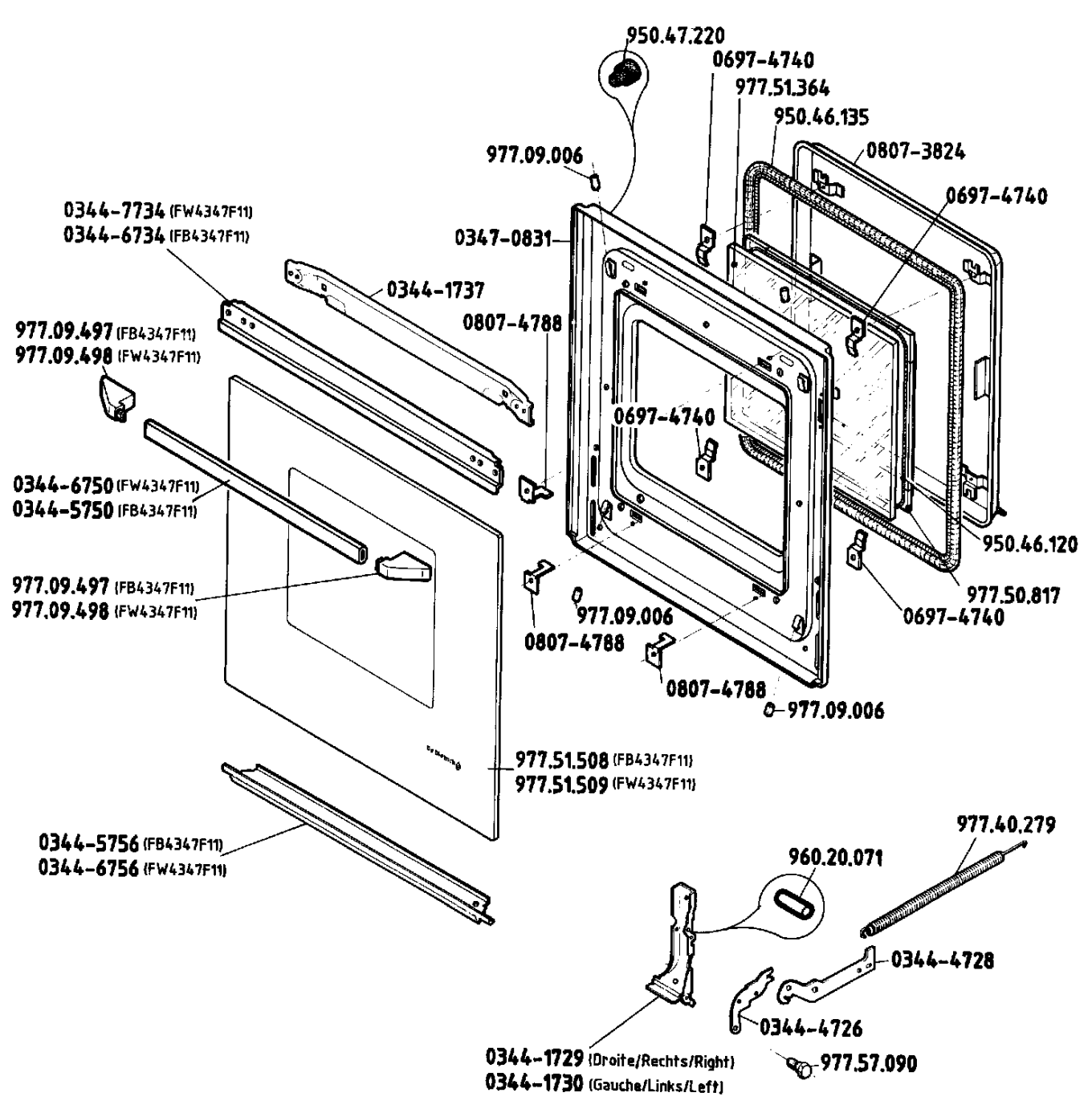
950.47.220
0697-4740
977.51.364
950.46.135
0807-3824
977.09.006
0697-4740
0344-7734 (FW4347F11)
0344-6734 (FB4347F11)
0347-0831
0344-1737
0807-4788
977.09.497 (FB4347F11)
977.09.498 (FW4347F11)
0697-4740
0344-6750 (FW4347F11)
0344-5750 (FB4347F11)
950.46.120
977.09.497 (FB4347F11)
977.09.498 (FW4347F11)
977.50.817
977.09.006
0697-4740
0807-4788
0807-4788
977.09.006
977.51.508 (FB4347F11)
977.51.509 (FW4347F11)
977.40.279
0344-5756 (FB4347F11)
0344-6756 (FW4347F11)
960.20.071
0344-4728
0344-4726
0344-1729 (Droite/Rechts/Right)
0344-1730 (Gauche/Links/Left)
977.57.090

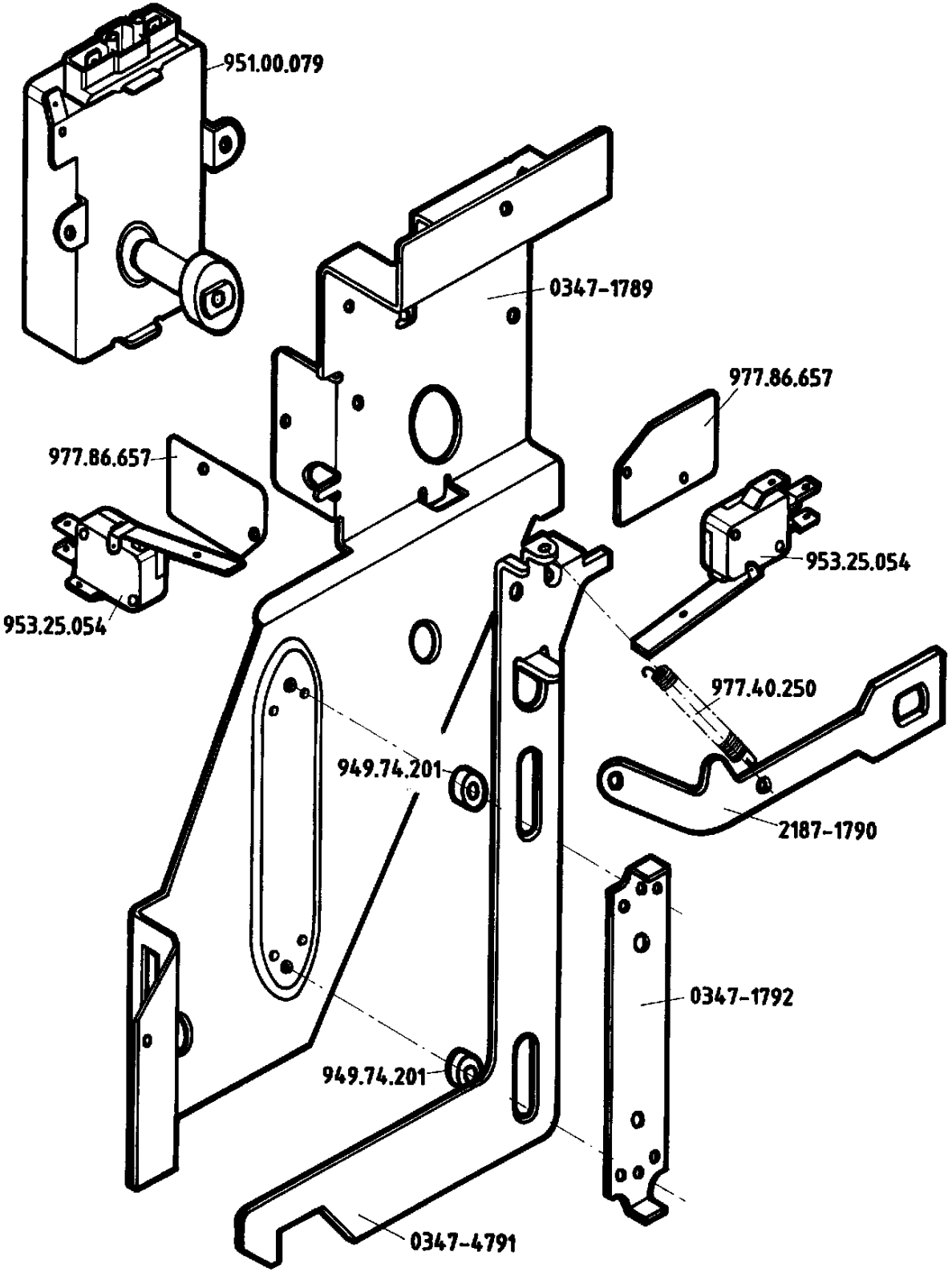
951.00.079
0347-1789
977.86.657
977.86.657
953.25.054
953.25.054
977.40.250
949.74.201
2187-1790
0347-1792
949.74.201
0347-4791

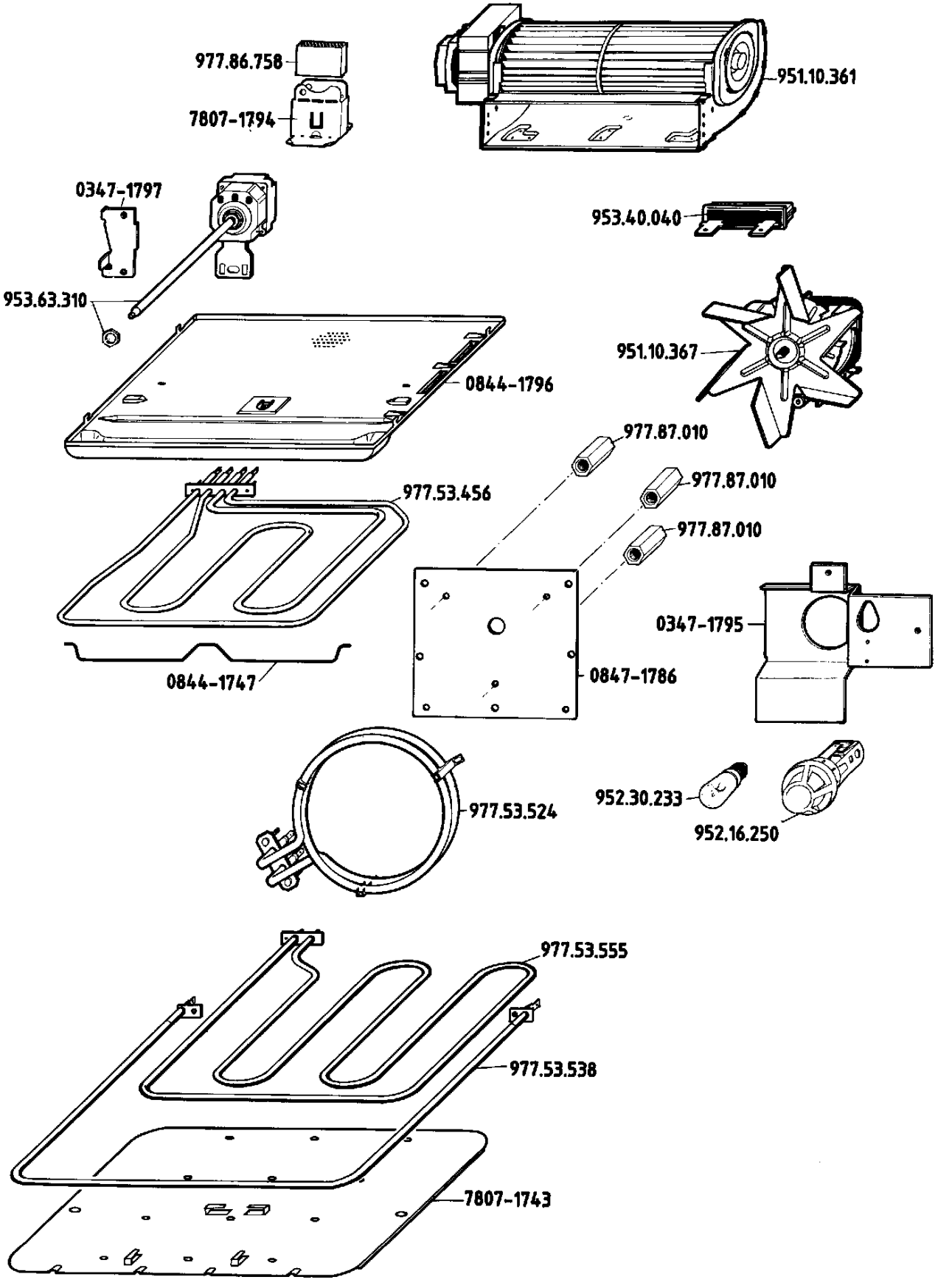
977.86.758
7807-1794
951.10.361
0347-1797
953.40.040
953.63.310
951.10.367
0844-1796
977.87.010
977.87.010
977.87.010
977.53.456
0347-1795
0844-1747
0847-1786
977.53.524
952.30.233
952.16.250
977.53.555
977.53.538
7807-1743

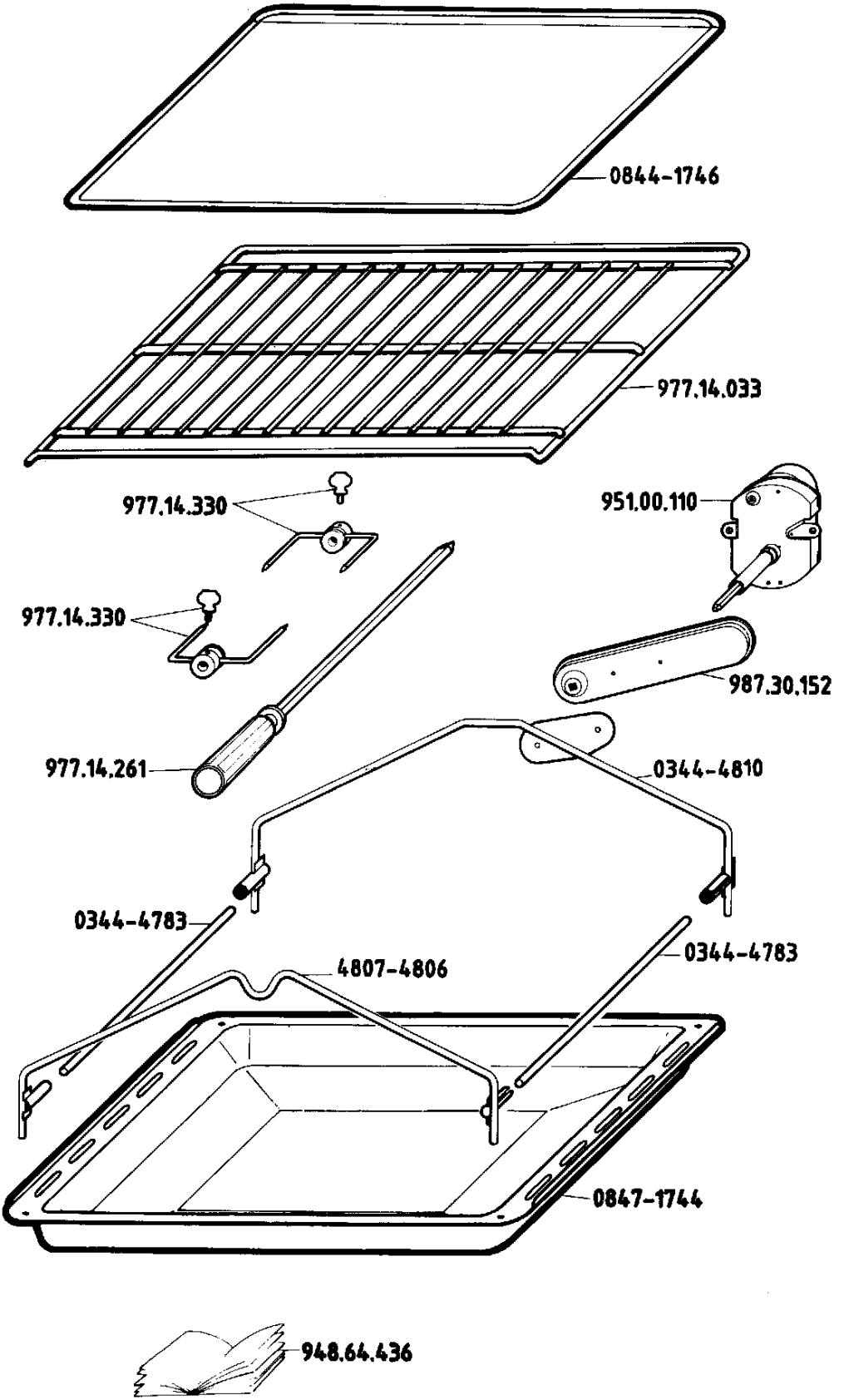
0844-1746
977.14.033
977.14.330
951.00.110
977.14.330
987.30.152
977.14.261
0344-4810
0344-4783
0344-4783
4807-4806
0847-1744
948.64.436