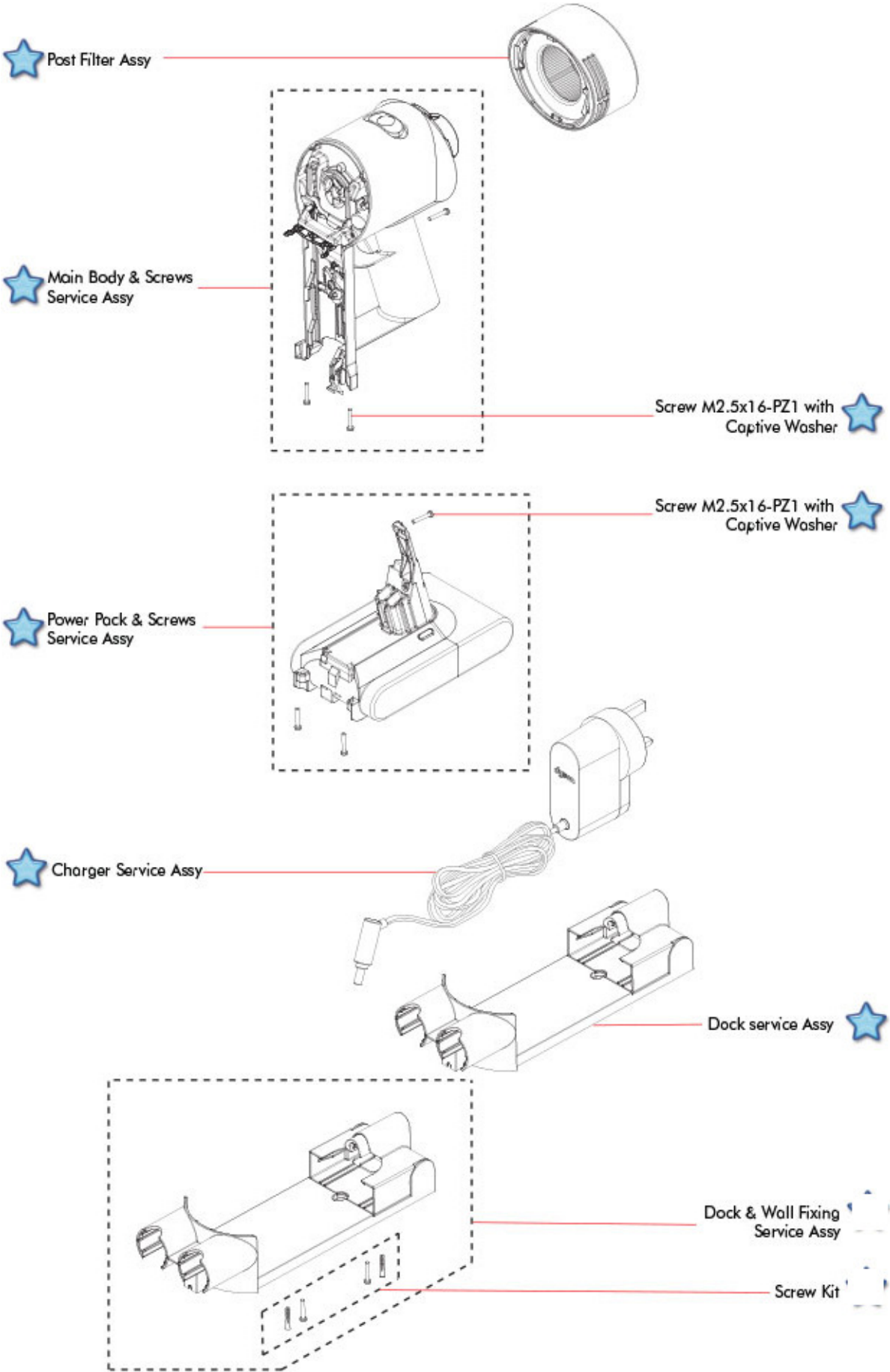
Post Filter Assy
Main Body & Screws Service Assy
Screw M2.5x16-PZ1 with Captive Washer
Screw M2.5x16-PZ1 with Captive Washer
Power Pack & Screws Service Assy
Charger Service Assy
Dock service Assy
Dock & Wall Fixing Service Assy
Screw Kit

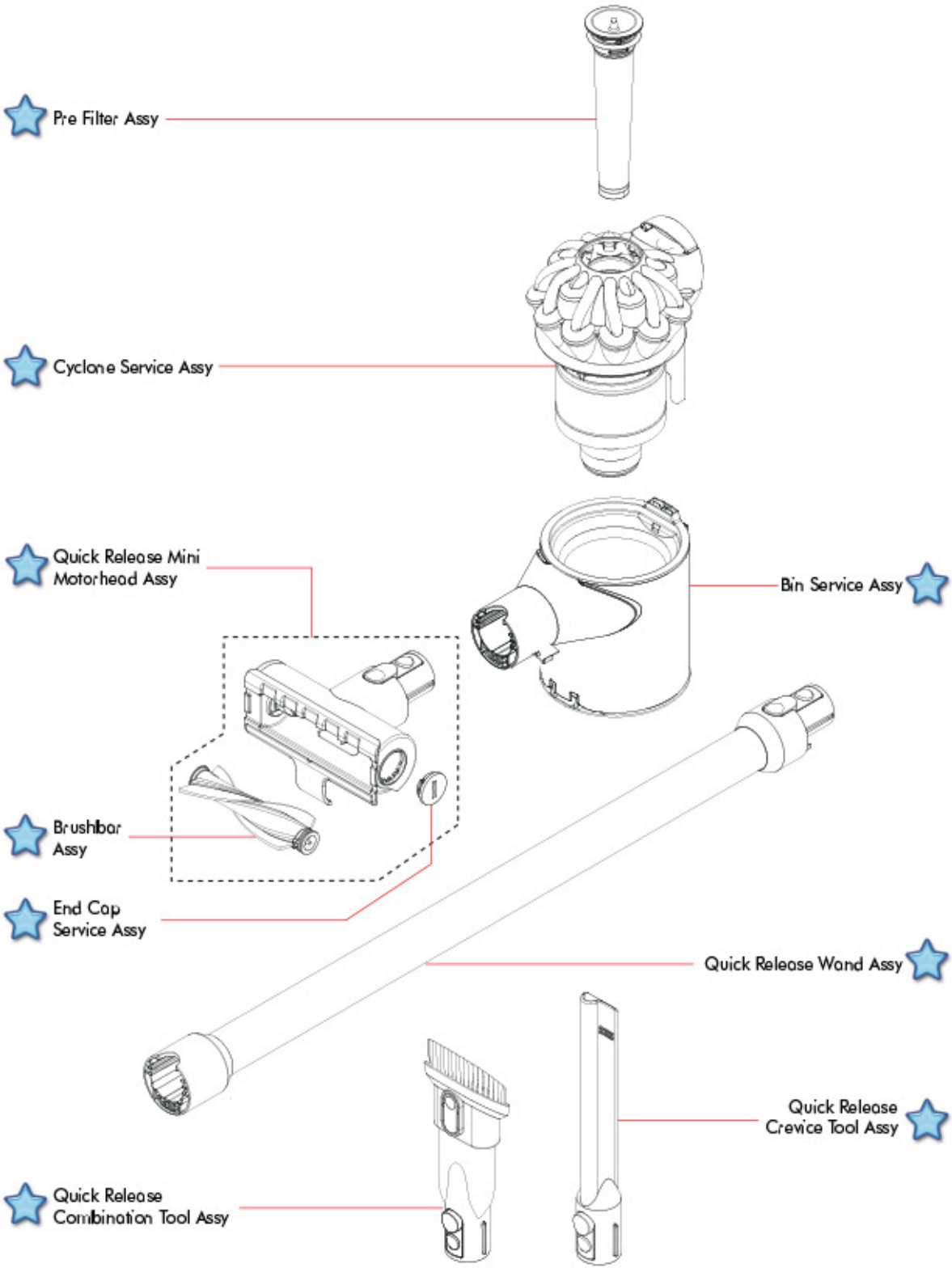
Pre Filter Assy
Cyclone Service Assy
Quick Release Mini Motorhead Assy
Bin Service Assy
Brushbar Assy
End Cap Service Assy
Quick Release Wand Assy
Quick Release Crevice Tool Assy
Quick Release Combination Tool Assy

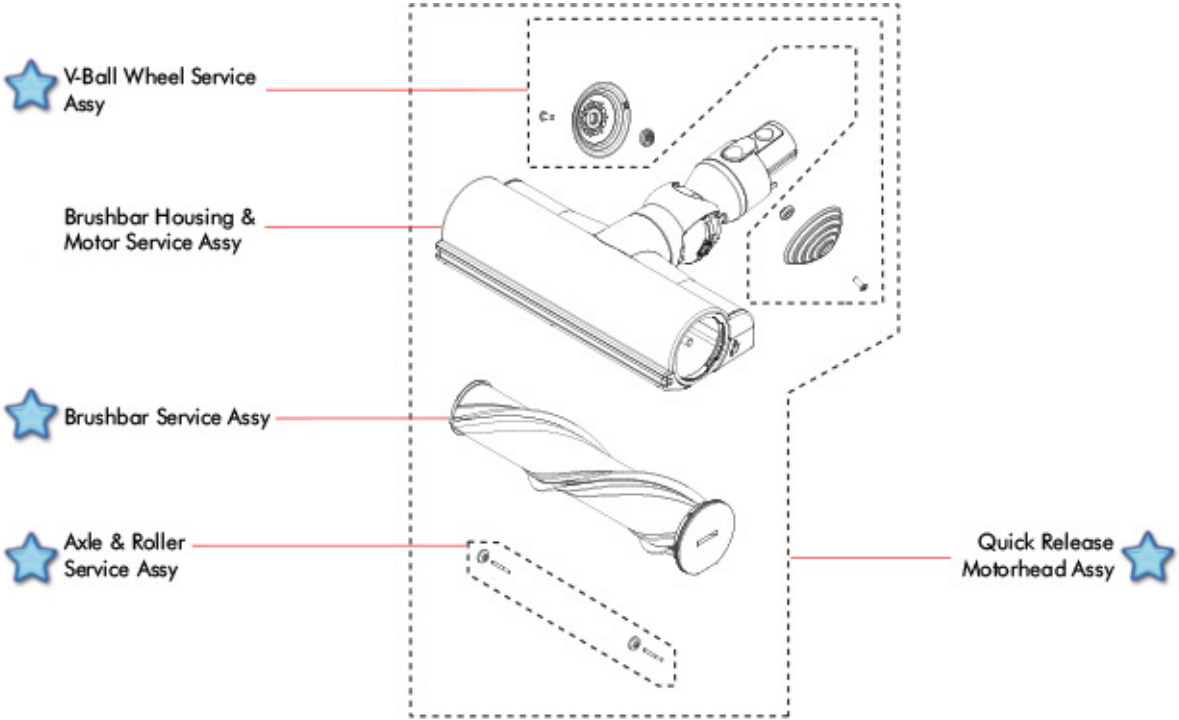
V-Ball Wheel Service Assy
Brushbar Housing & Motor Service Assy
Brushbar Service Assy
Axle & Roller Service Assy
Quick Release Motorhead Assy

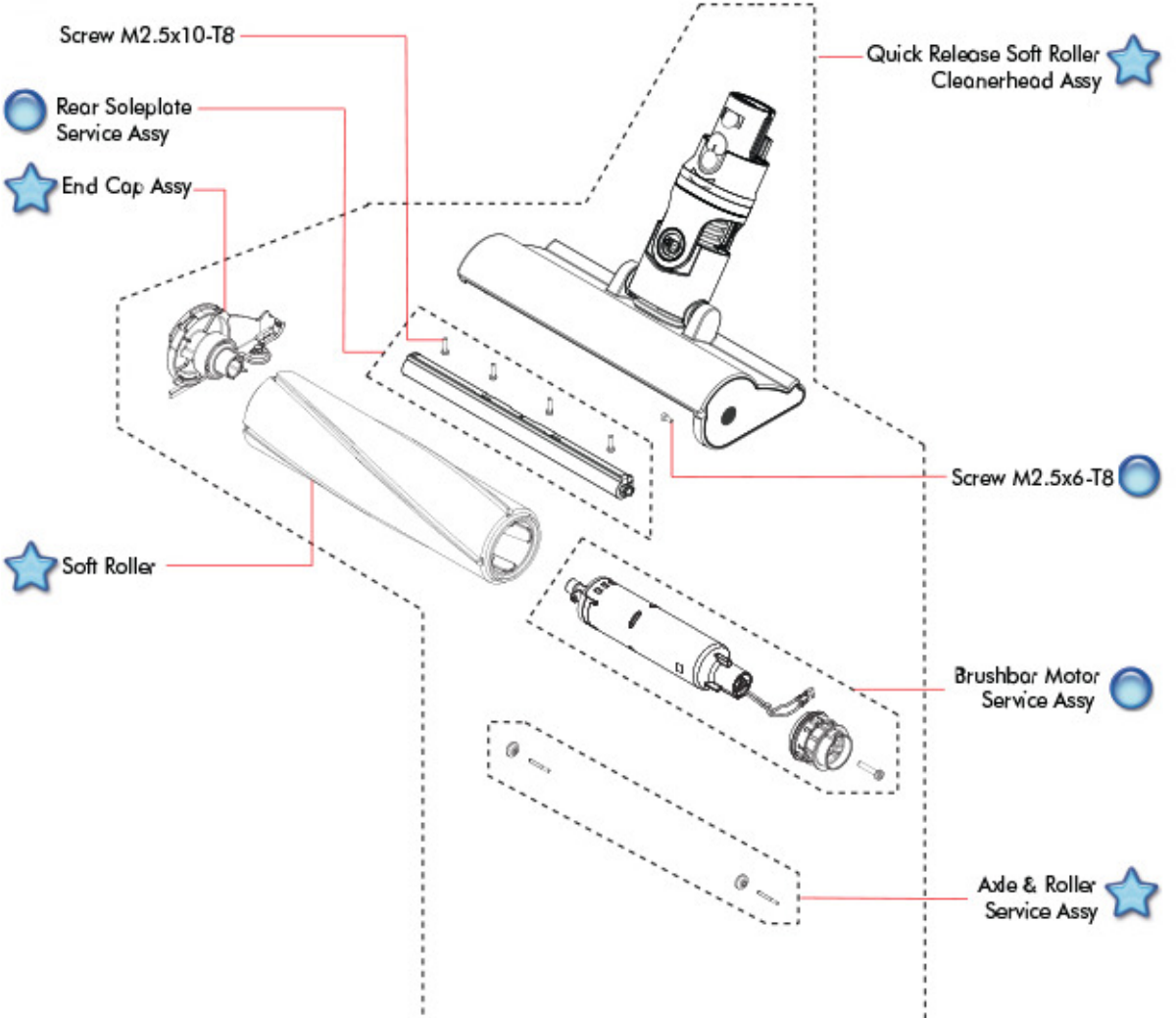
Screw M2.5x10-T8
Rear Soleplate Service Assy
End Cap Assy
Soft Roller
Quick Release Soft Roller Cleanerhead Assy
Screw M2.5x6-T8
Brushbar Motor Service Assy
Axle & Roller Service Assy

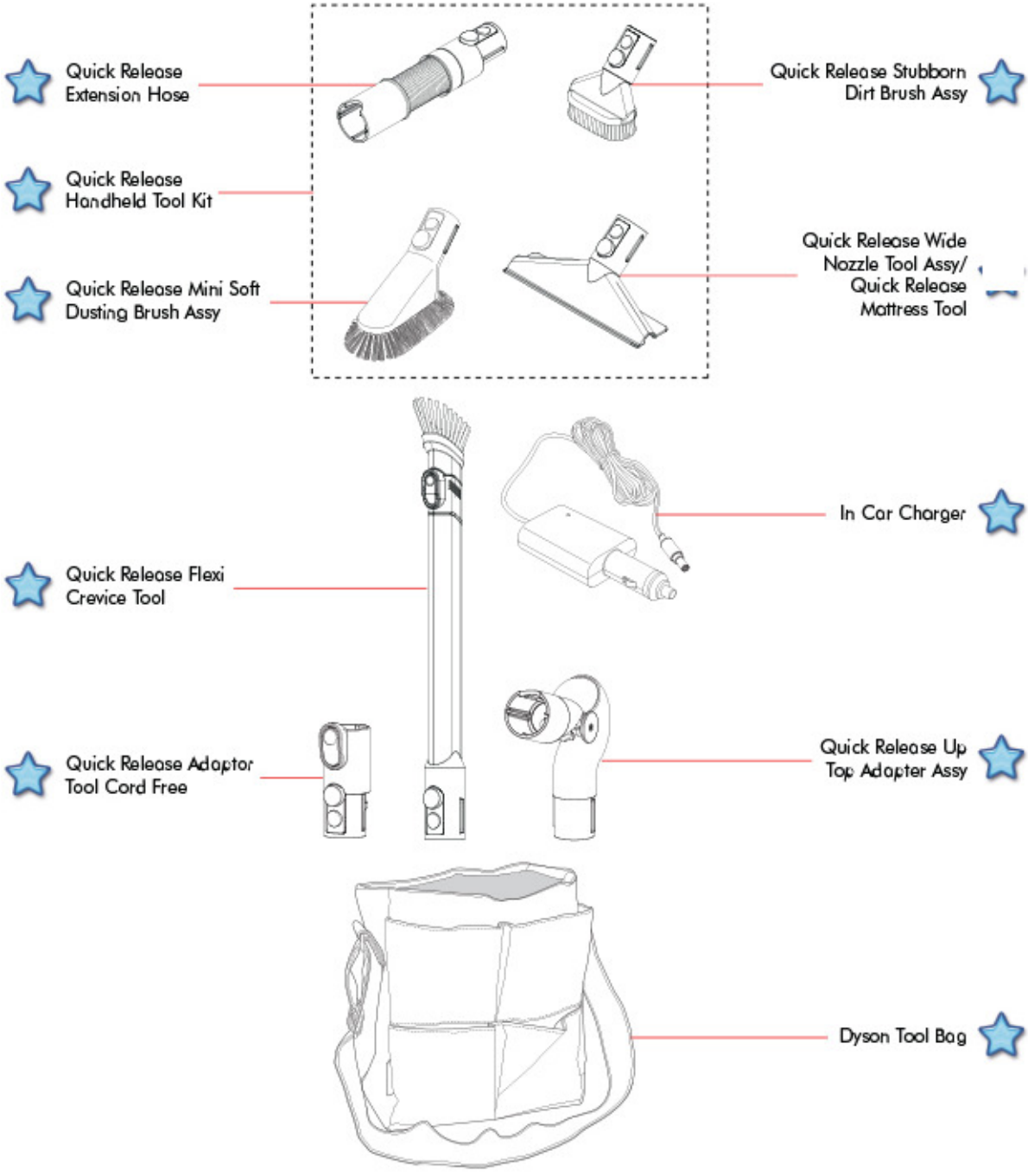
Quick Release Extension Hose
Quick Release Stubborn Dirt Brush Assy
Quick Release Handheld Tool Kit
Quick Release Wide Nozzle Tool Assy/ Quick Release Mattress Tool
Quick Release Mini Soft Dusting Brush Assy
In Car Charger
Quick Release Flexi Crevice Tool
Quick Release Adaptor Tool Cord Free
Quick Release Up Top Adapter Assy
Dyson Tool Bag