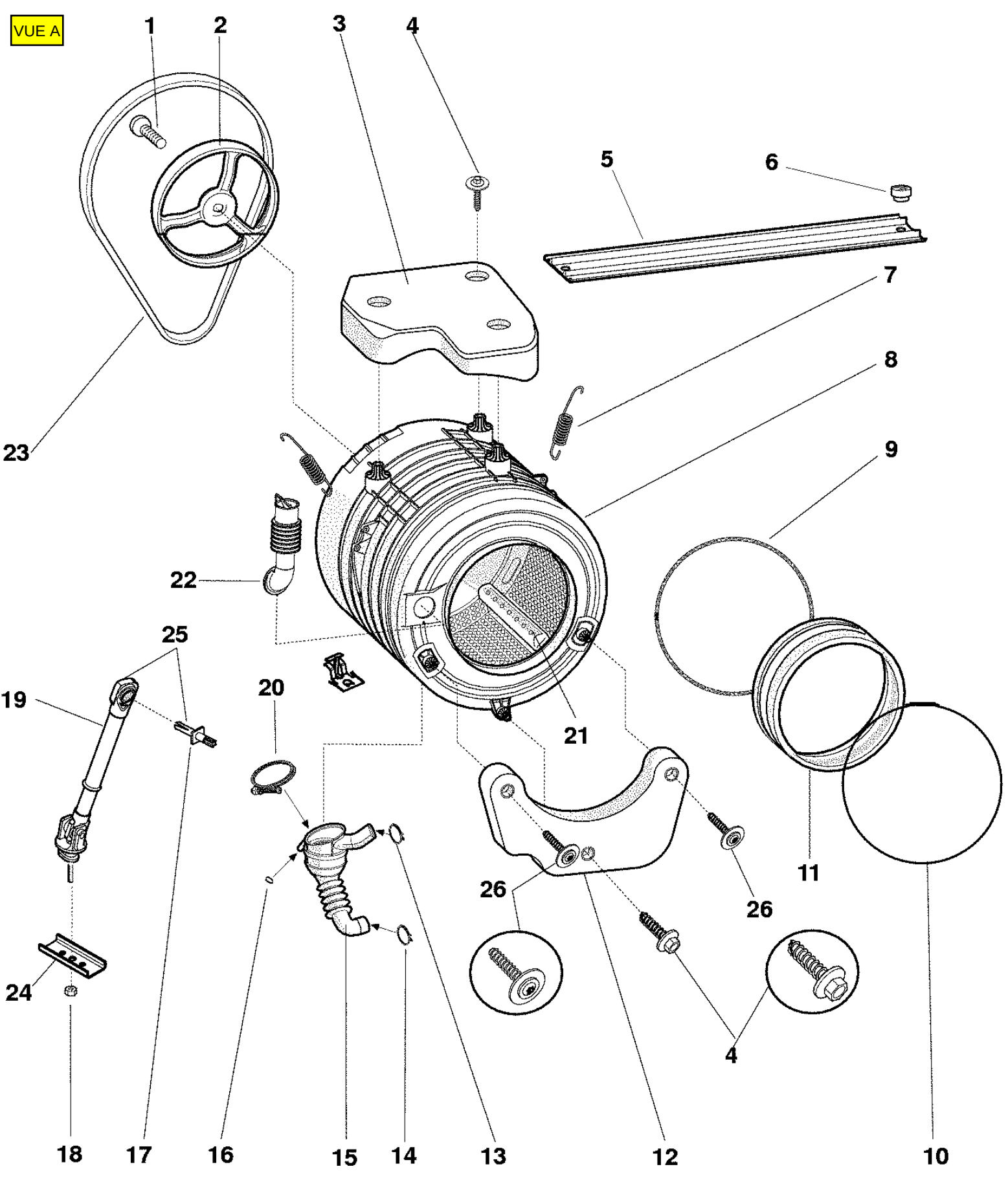
VUE A
1
2
3
4
5
6
7
8
9
10
11
12
13
14
15
16
17
18
19
20
21
22
23
24
25
26
26
4

VUE B

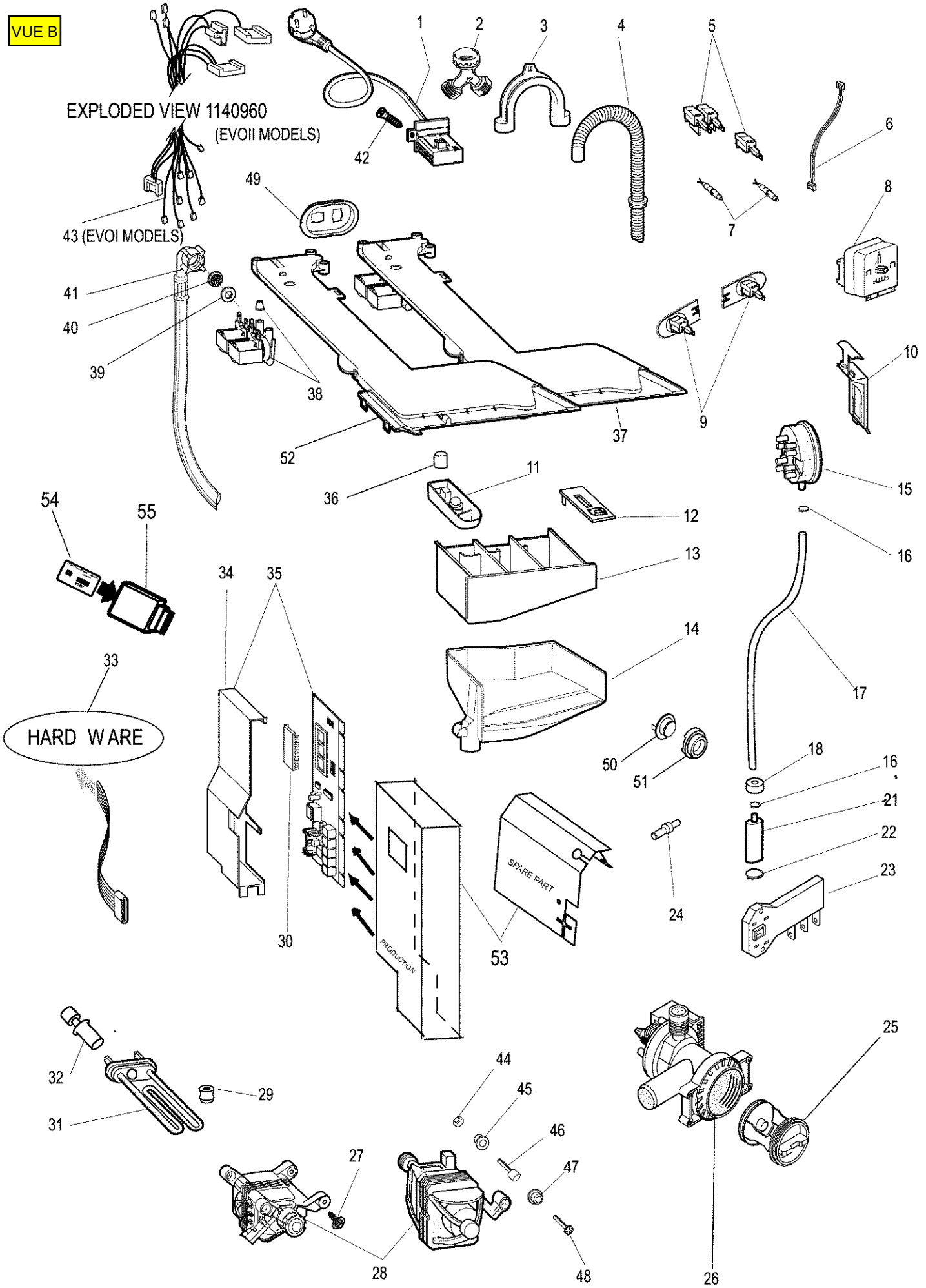
EXPLODED VIEW 1140960
(EVOII MODELS)
43 (EVOI MODELS)
HARD WARE
SPARE PART
PRODUCTION
1
2
3
4
5
6
7
8
9
10
11
12
13
14
15
16
17
18
21
22
23
24
25
26
27
28
29
30
31
32
33
34
35
36
37
38
39
40
41
42
44
45
46
47
48
49
50
51
52
53
54
55

VUE C

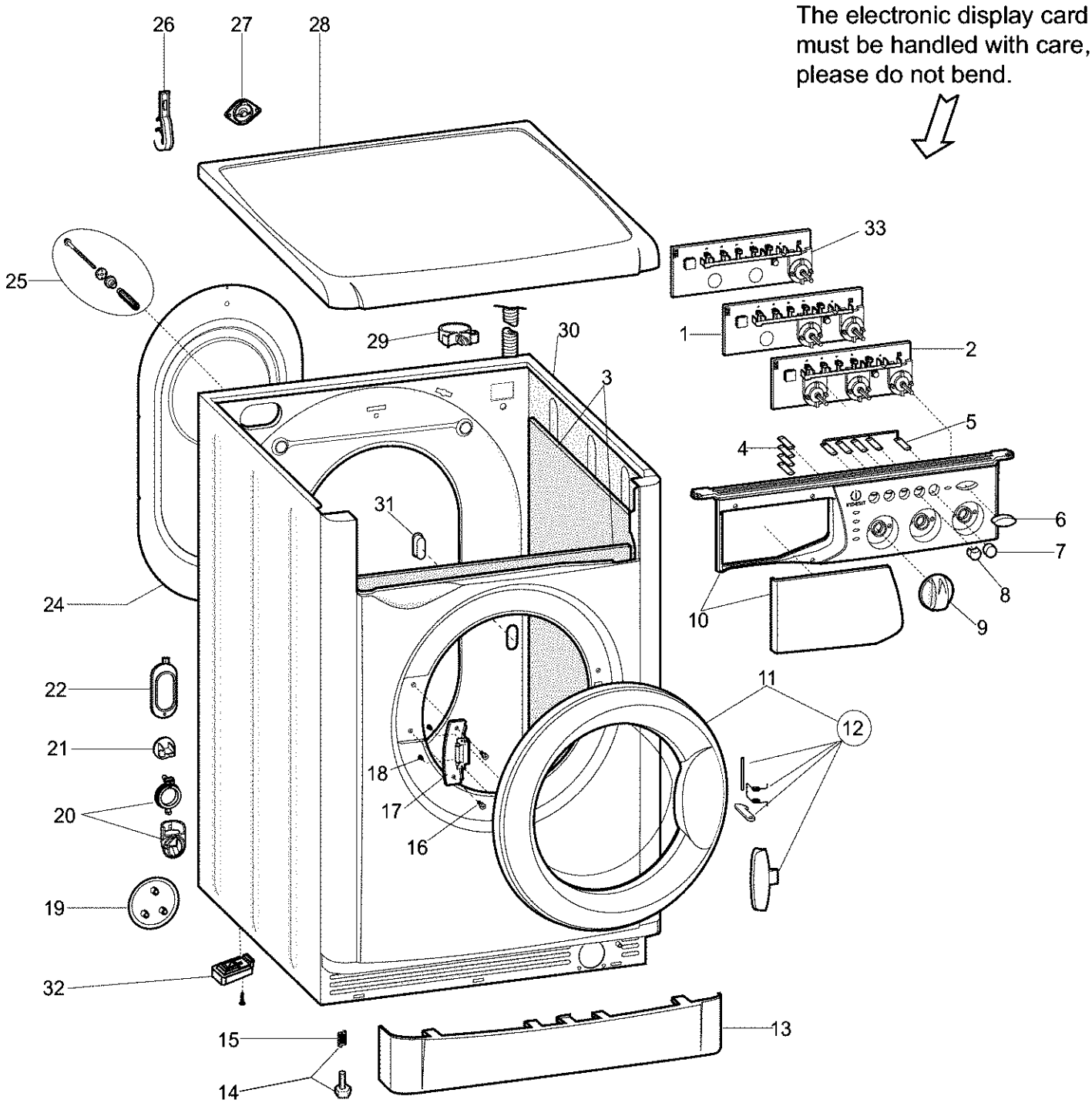
The electronic display card must be handled with care, please do not bend.
26
27
28
33
25
29
30
1
2
3
5
4
31
6
7
8
24
10
9
22
11
12
21
18
17
20
16
19
32
15
13
14