COLOR VARIATION PARTS

For Models: 5KSM150PSE_ _0

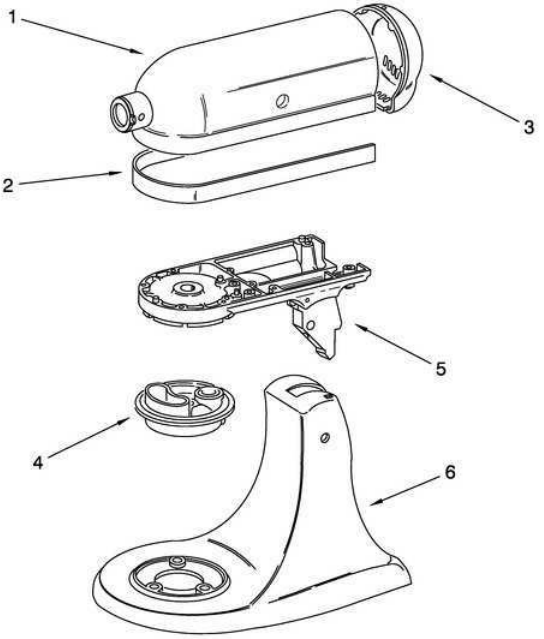

FOR ORDERING INFORMATION REFER TO PARTS PRICE LIST

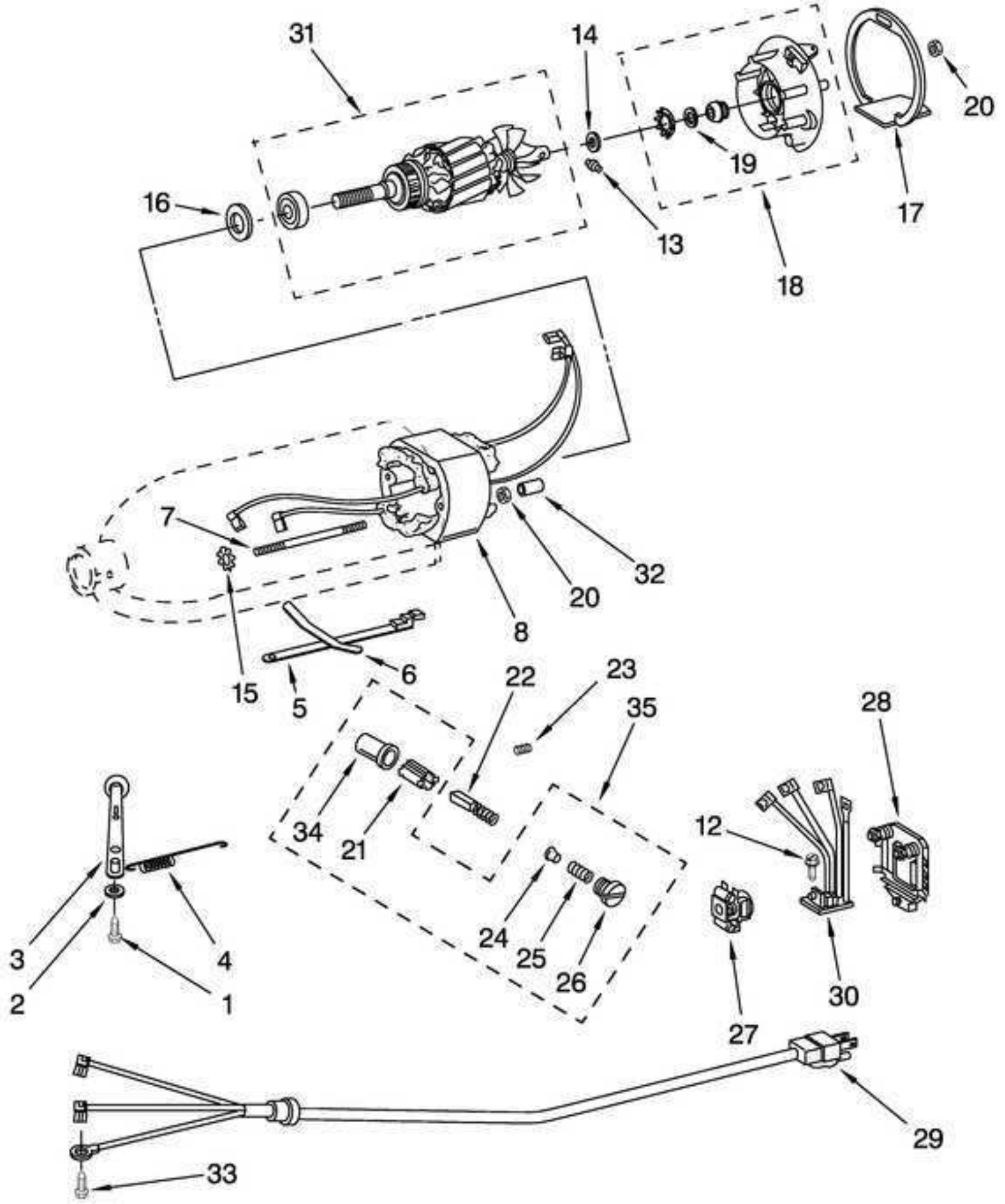
31
14
20
19
16
13
17
18
7
32
20
8
15
6
5
22
23
35
28
34
21
12
24
25
26
3
4
2
1
27
30
29
33

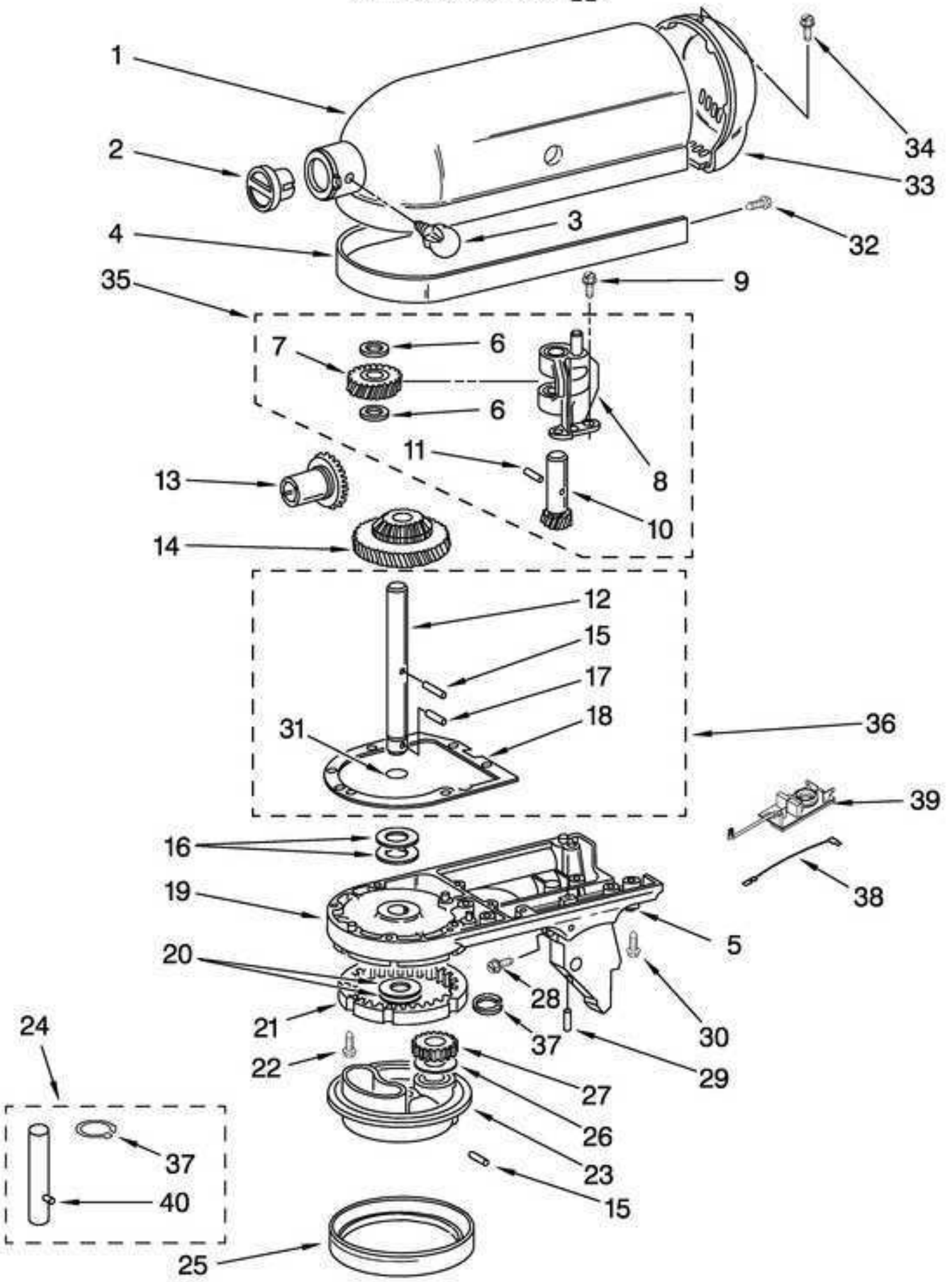
1
2
3
4
5
6
6
7
8
9
10
11
12
13
14
15
15
16
17
18
19
20
21
22
23
24
25
26
27
28
29
30
31
32
33
34
35
36
37
37
38
39
40

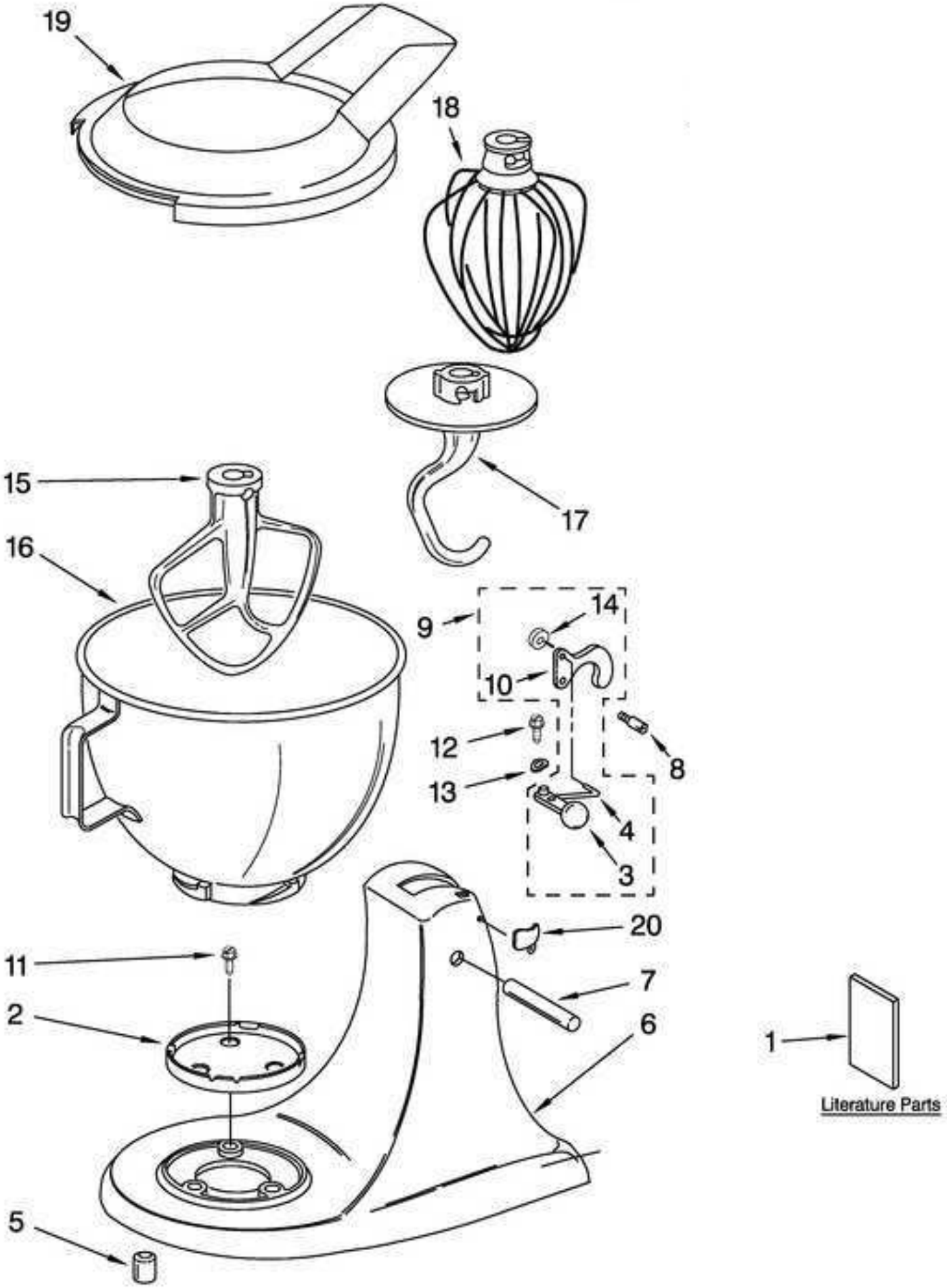
19
18
17
15
16
9
14
10
12
8
13
4
3
20
11
7
2
6
1
Literature Parts
5