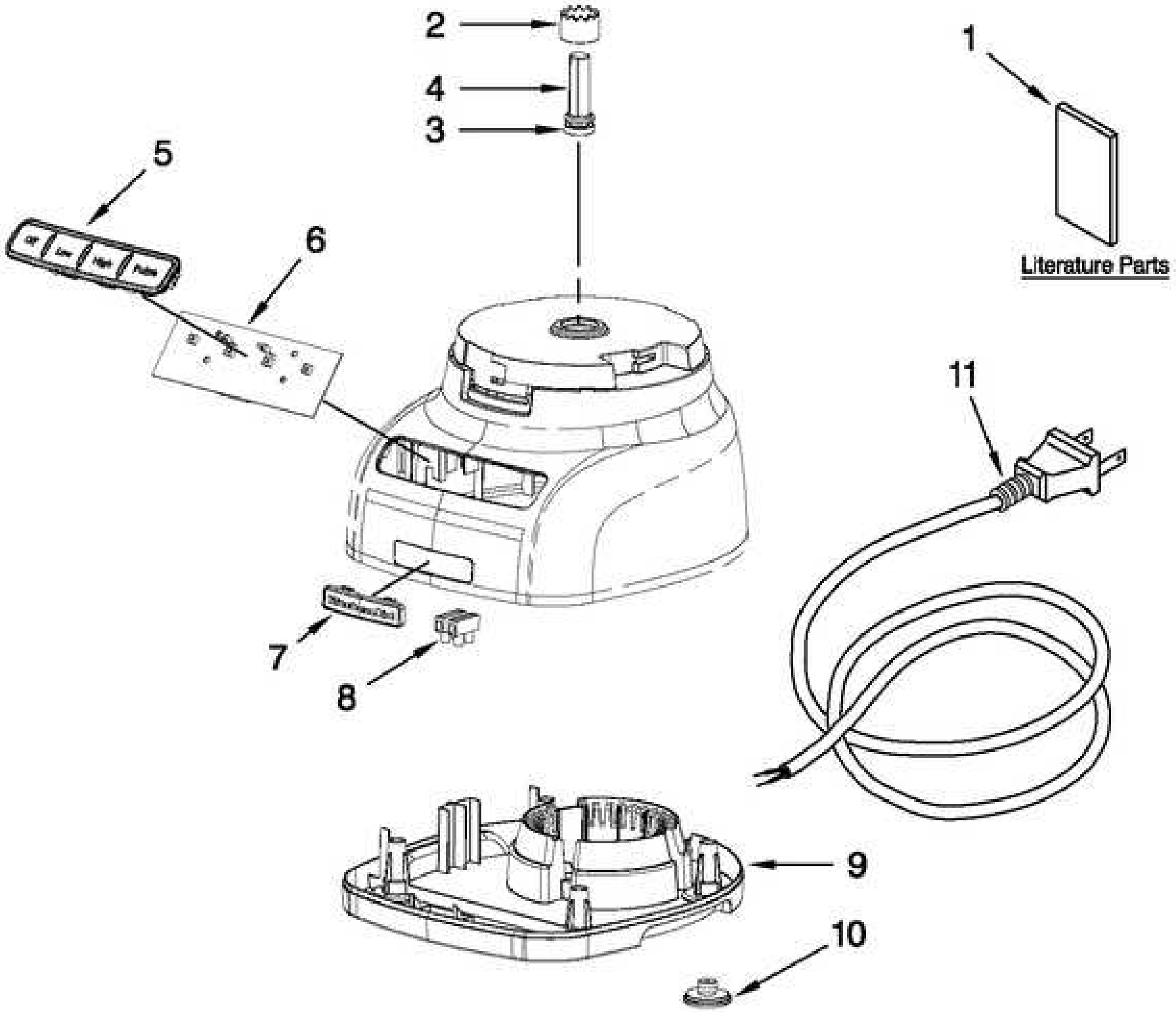
2
4
3
1
Literature Parts
5
6
11
7
8
9
10

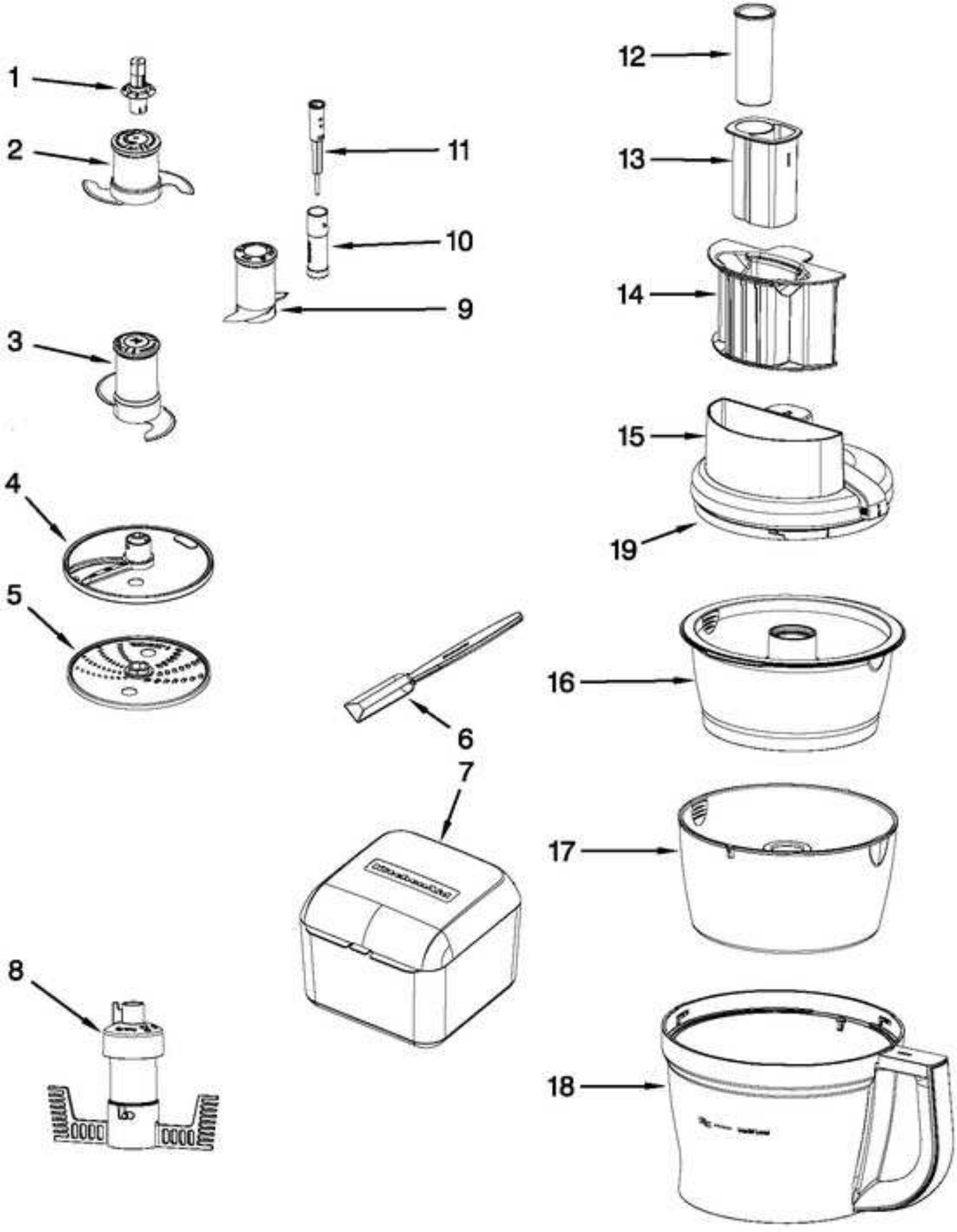
1
2
3
4
5
6
7
8
9
10
11
12
13
14
15
16
17
18
19