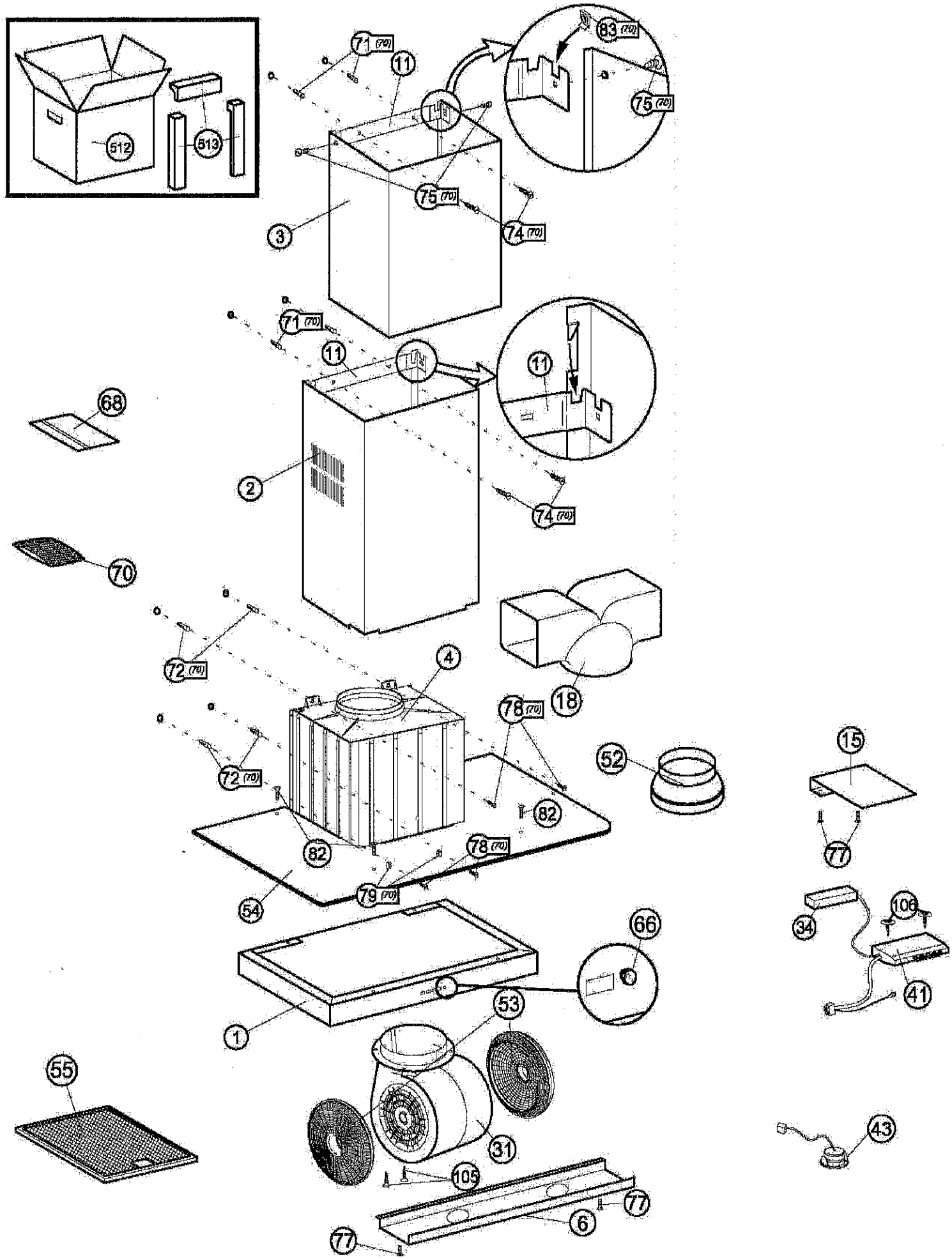
512
513
71 (70)
11
83 (70)
75 (70)
3
74 (70)
2
68
70
72 (70)
4
18
78 (70)
52
15
77
82
54
79 (70)
34
106
41
66
1
53
55
31
43
105
6