VUE A

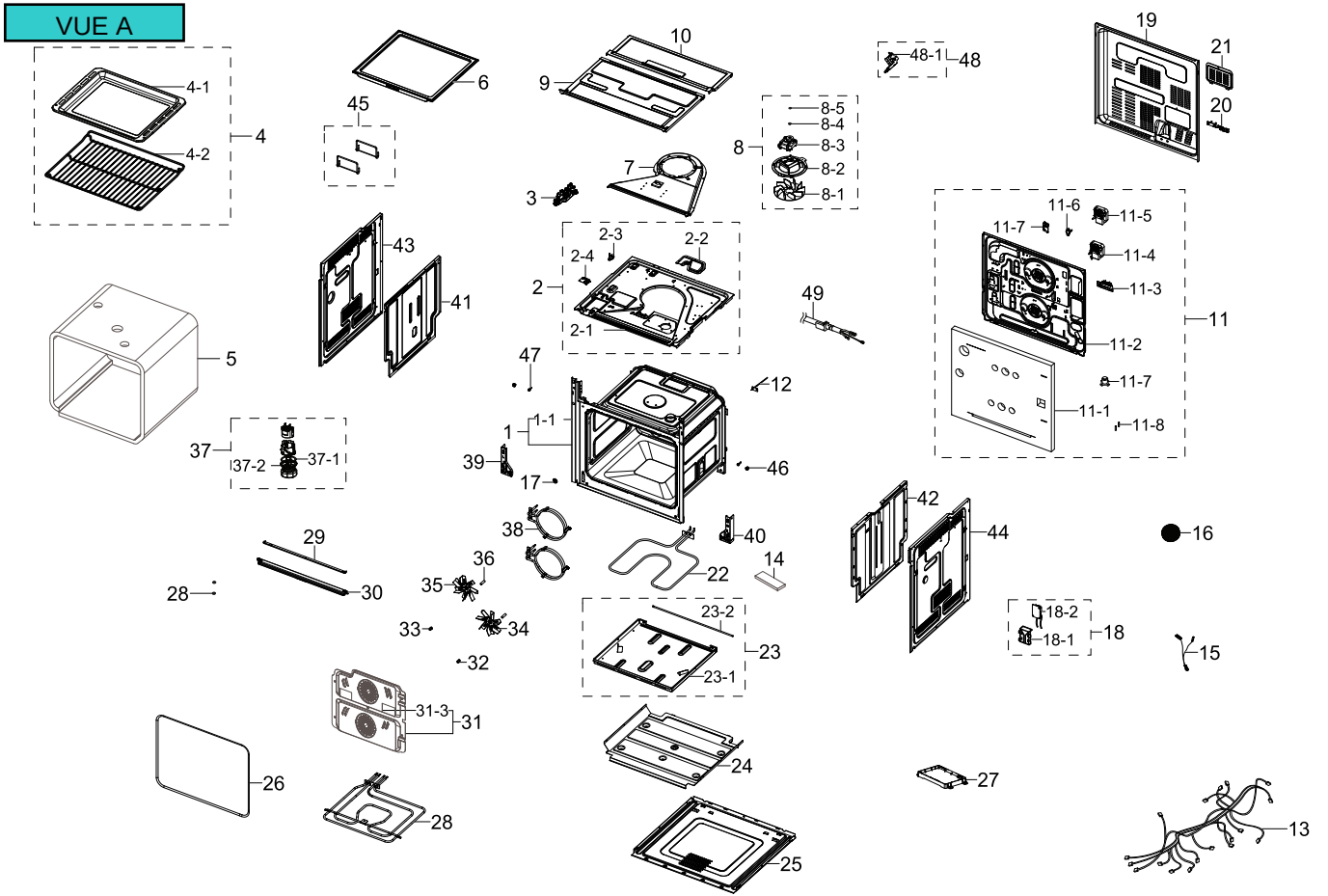
4-1
4-2
4
6
45
10
9
48-1
48
19
21
20
8-5
8-4
8-3
8-2
8-1
8
7
3
43
41
2-3
2-2
2-4
2
2-1
49
11-6
11-5
11-7
11-4
11-3
11
11-2
11-7
11-1
11-8
5
47
12
1-1
1
37
37-2
37-1
39
17
46
42
44
16
38
40
29
36
14
22
28
30
35
34
33
32
23-2
23
23-1
18-2
18-1
18
15
31-3
31
26
24
27
28
25
13

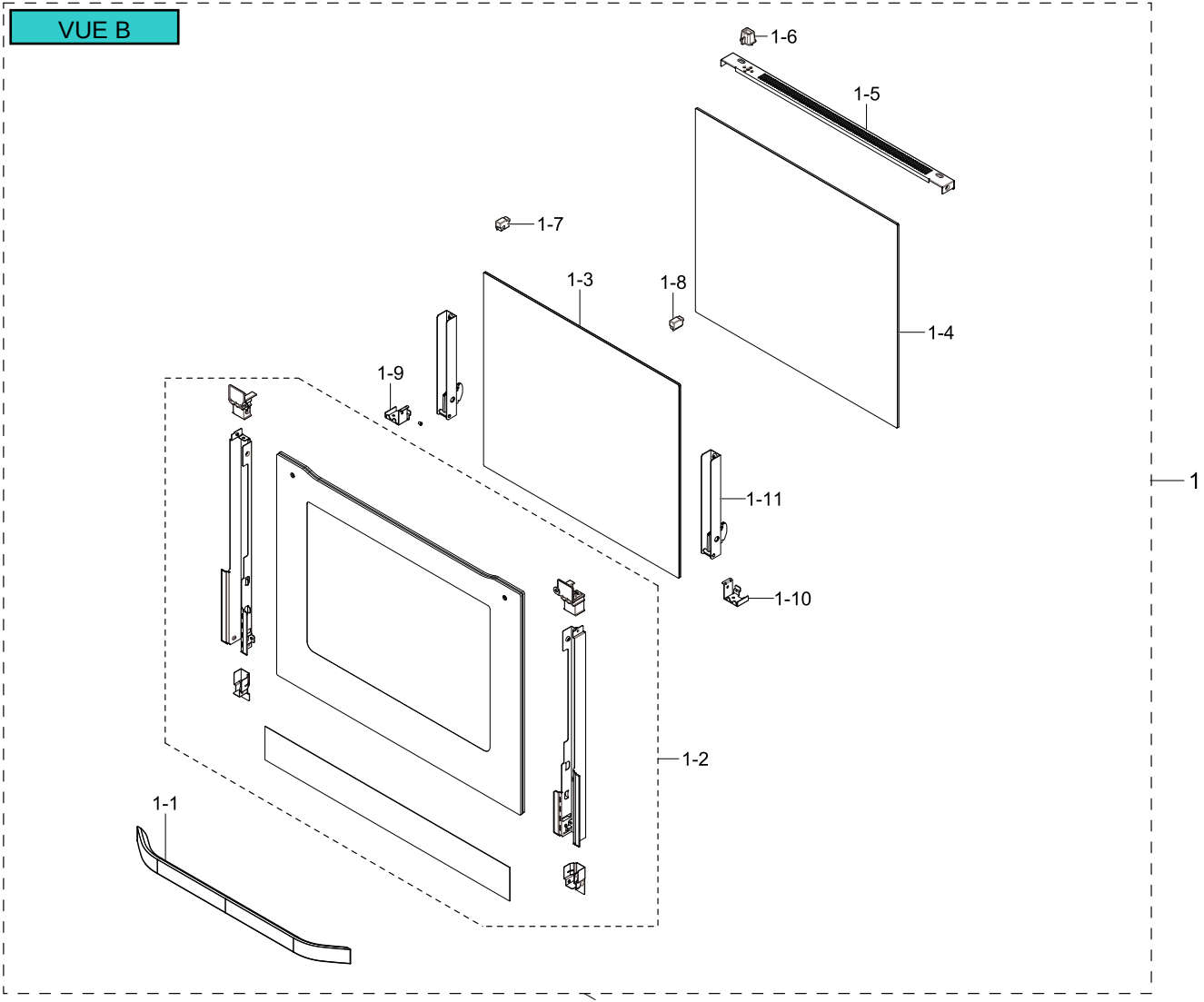
VUE B
1-6
1-5
1-7
1-3
1-8
1-4
1-9
1-11
1
1-10
1-2
1-1

VUE C

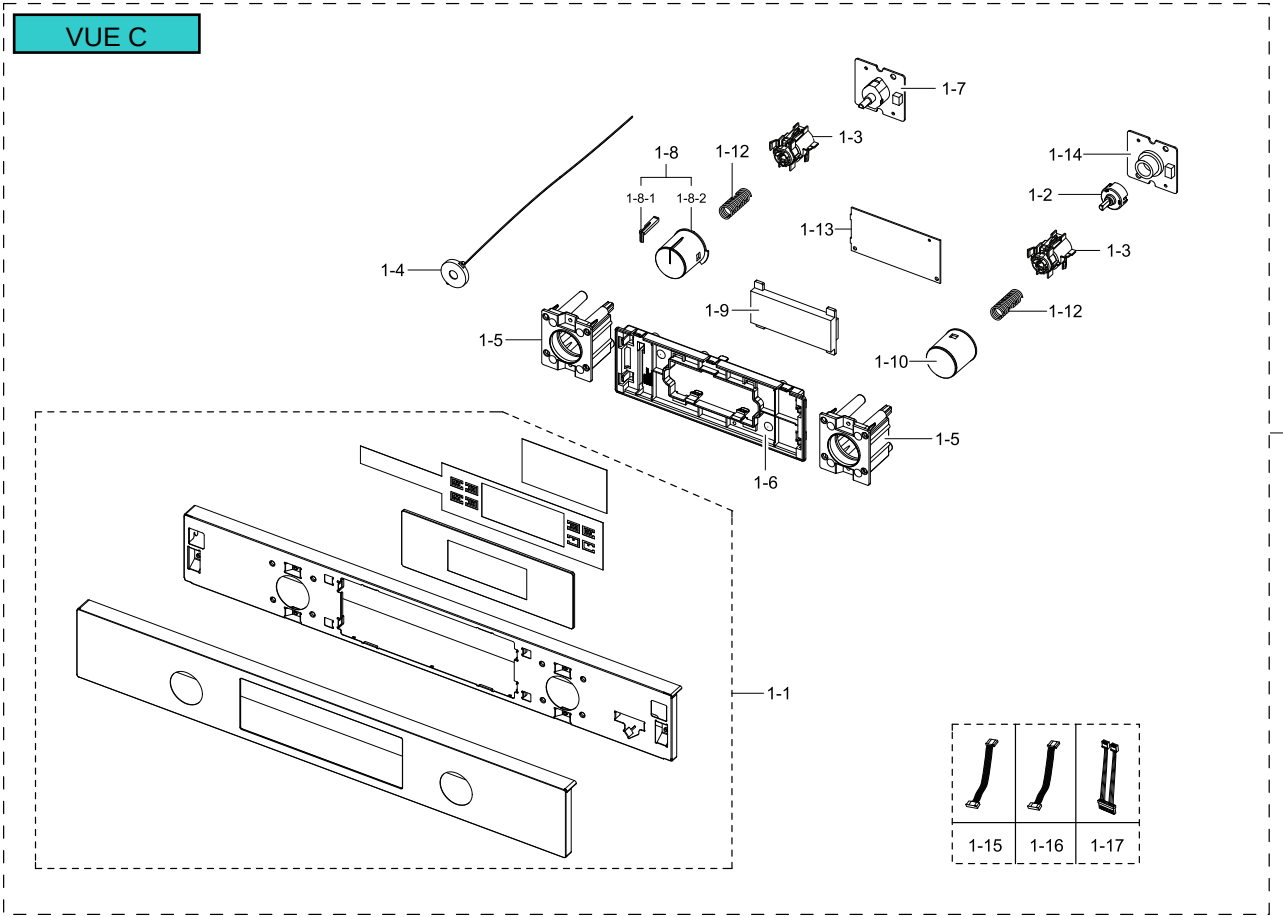
1-7
1-3
1-8
1-12
1-14
1-8-1
1-8-2
1-2
1-13
1-3
1-4
1-9
1-12
1-5
1-10
1-5
1-6
1
1-1
1-15
1-16
1-17