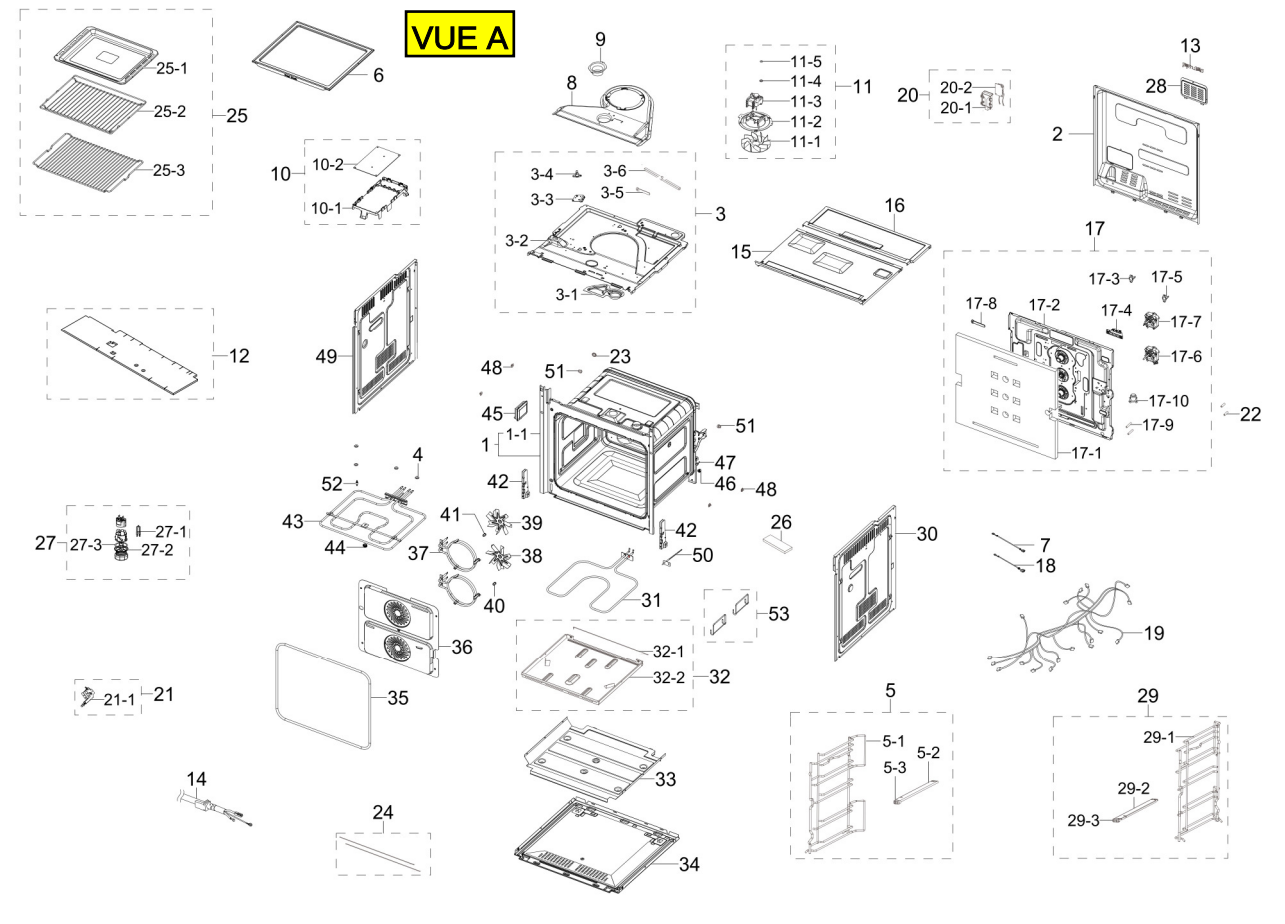
VUE A
25-1
25-2
25-3
25
6
9
8
11-5
11-4
11-3
11-2
11-1
11
20
20-2
20-1
13
28
2
10
10-2
10-1
3-4
3-6
3-3
3-5
3
3-2
3-1
16
15
17
17-3
17-5
17-8
17-2
17-4
17-7
17-6
17-10
17-9
17-1
22
12
49
48
51
23
45
1-1
1
51
47
46
48
4
52
42
43
44
41
39
37
38
40
42
50
31
26
30
7
18
19
27
27-3
27-1
27-2
53
36
32-1
32-2
32
35
21-1
21
5
5-1
5-2
5-3
29
29-1
29-2
29-3
14
24
33
34

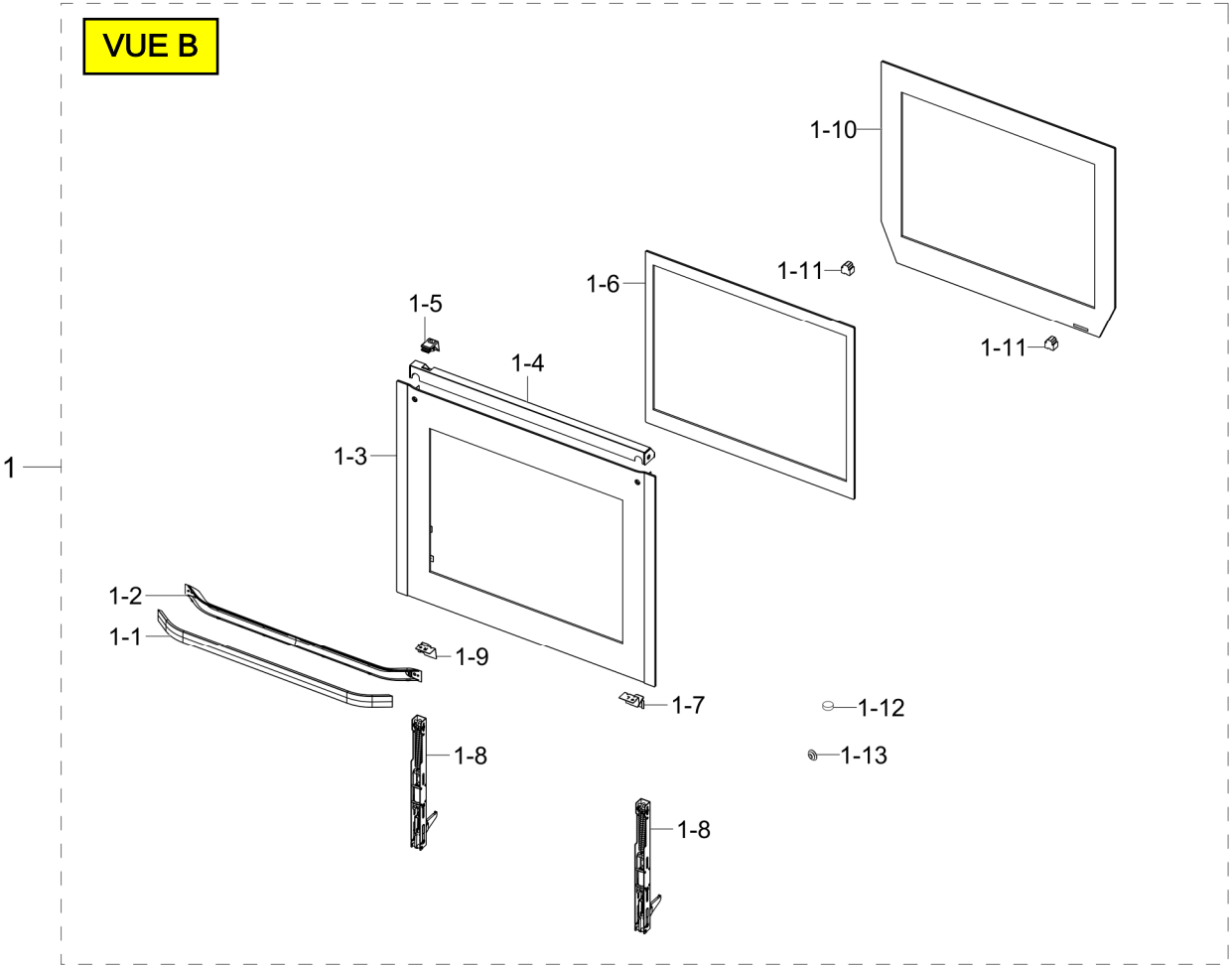
VUE B
1-10
1-11
1-6
1-11
1-5
1-4
1
1-3
1-2
1-1
1-9
1-7
1-12
1-8
1-13
1-8

VUE C

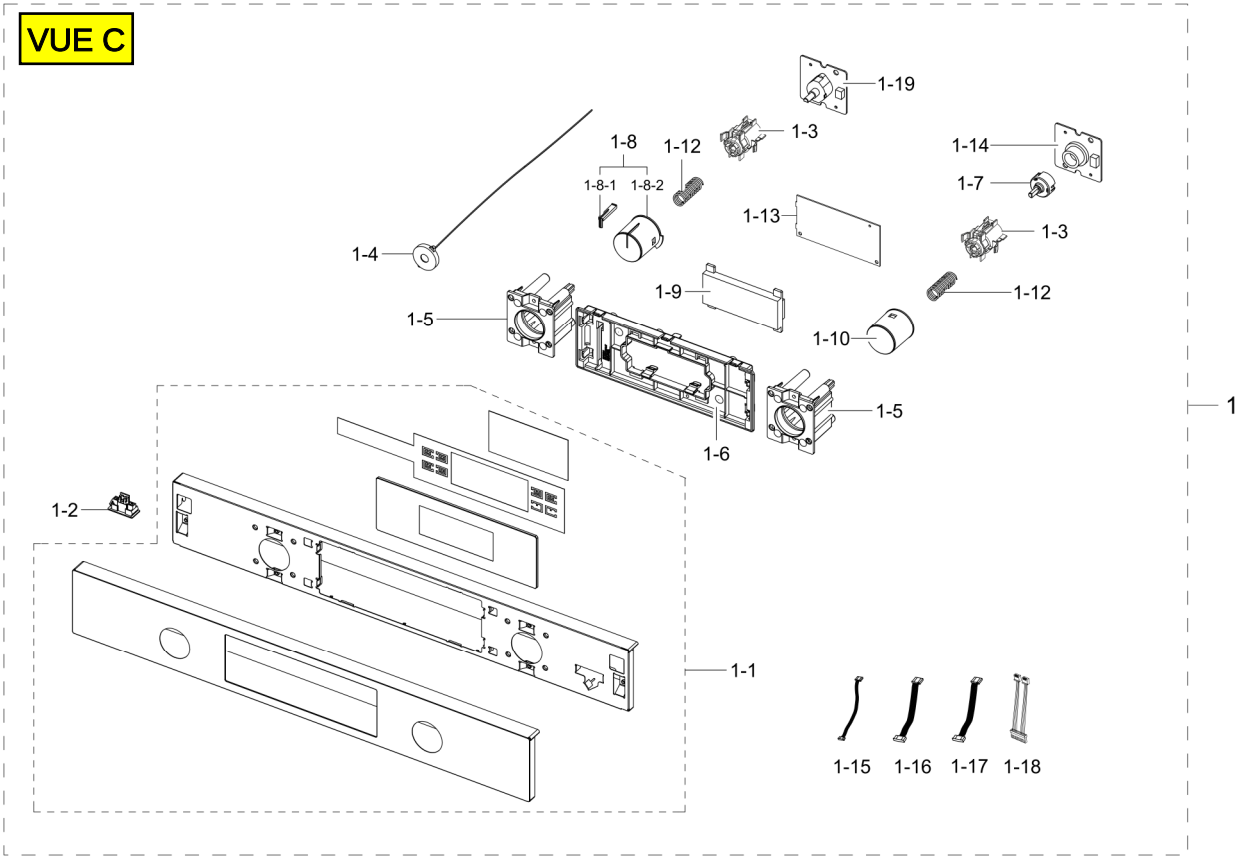
1-19
1-3
1-8
1-12
1-14
1-8-1
1-8-2
1-7
1-13
1-3
1-4
1-9
1-12
1-5
1-10
1-5
1
1-6
1-2
1-1
1-15
1-16
1-17
1-18