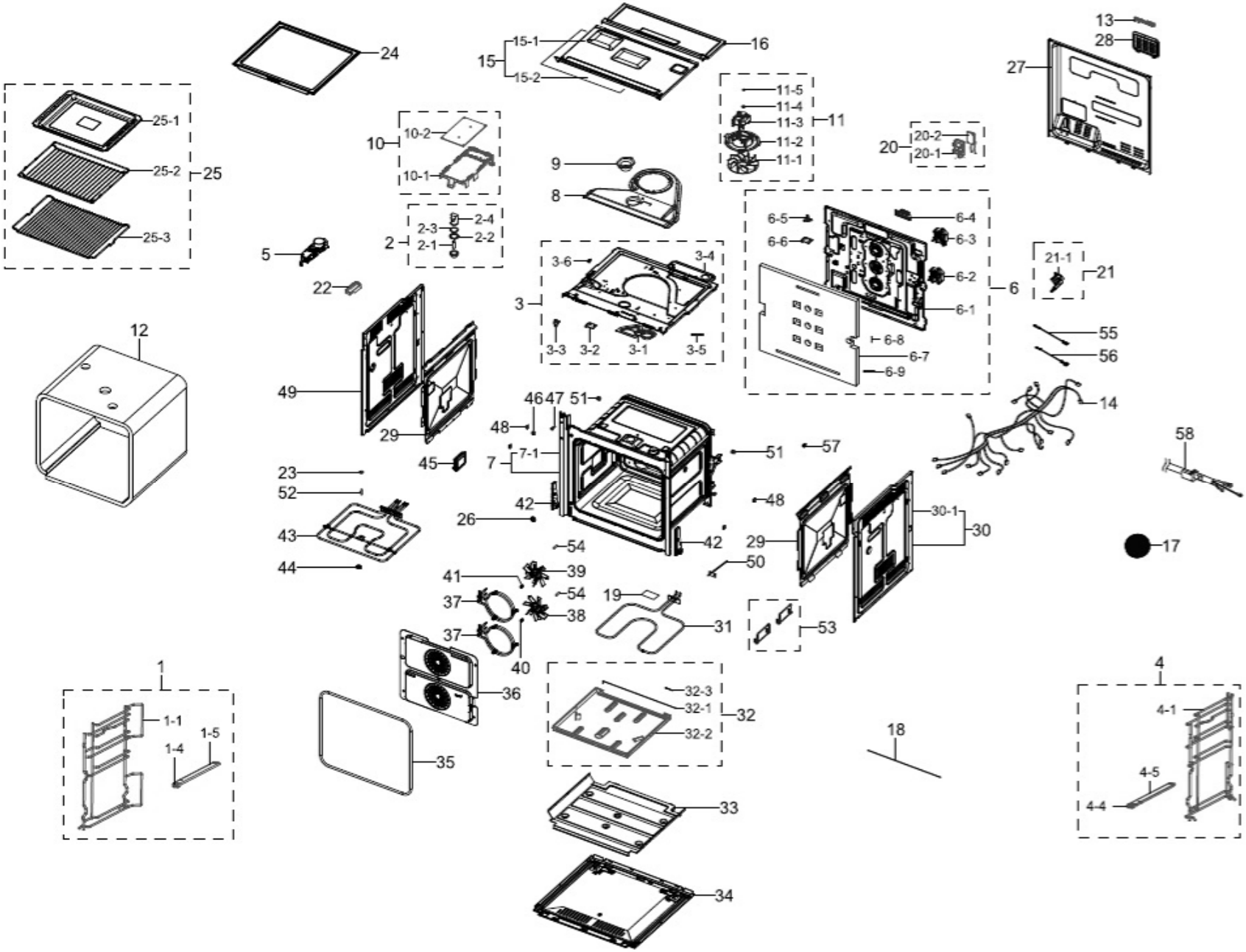
24
15
15-1
15-2
16
13
28
27
25-1
25-2
25
25-3
10
10-2
10-1
11-5
11-4
11-3
11
11-2
11-1
20
20-2
20-1
9
8
2
2-3
2-4
2-1
2-2
5
3-6
3-4
3
3-3
3-2
3-1
3-5
6-5
6-4
6-6
6-3
6-2
6
6-1
6-8
6-7
6-9
21-1
21
22
12
55
56
49
29
46
47
51
48
7
7-1
45
23
52
43
44
26
42
51
57
14
58
48
30-1
30
29
42
54
50
17
41
39
54
38
37
37
40
19
31
53
1
1-1
1-5
1-4
36
35
32-3
32-1
32
32-2
18
4
4-1
4-5
4-4
33
34

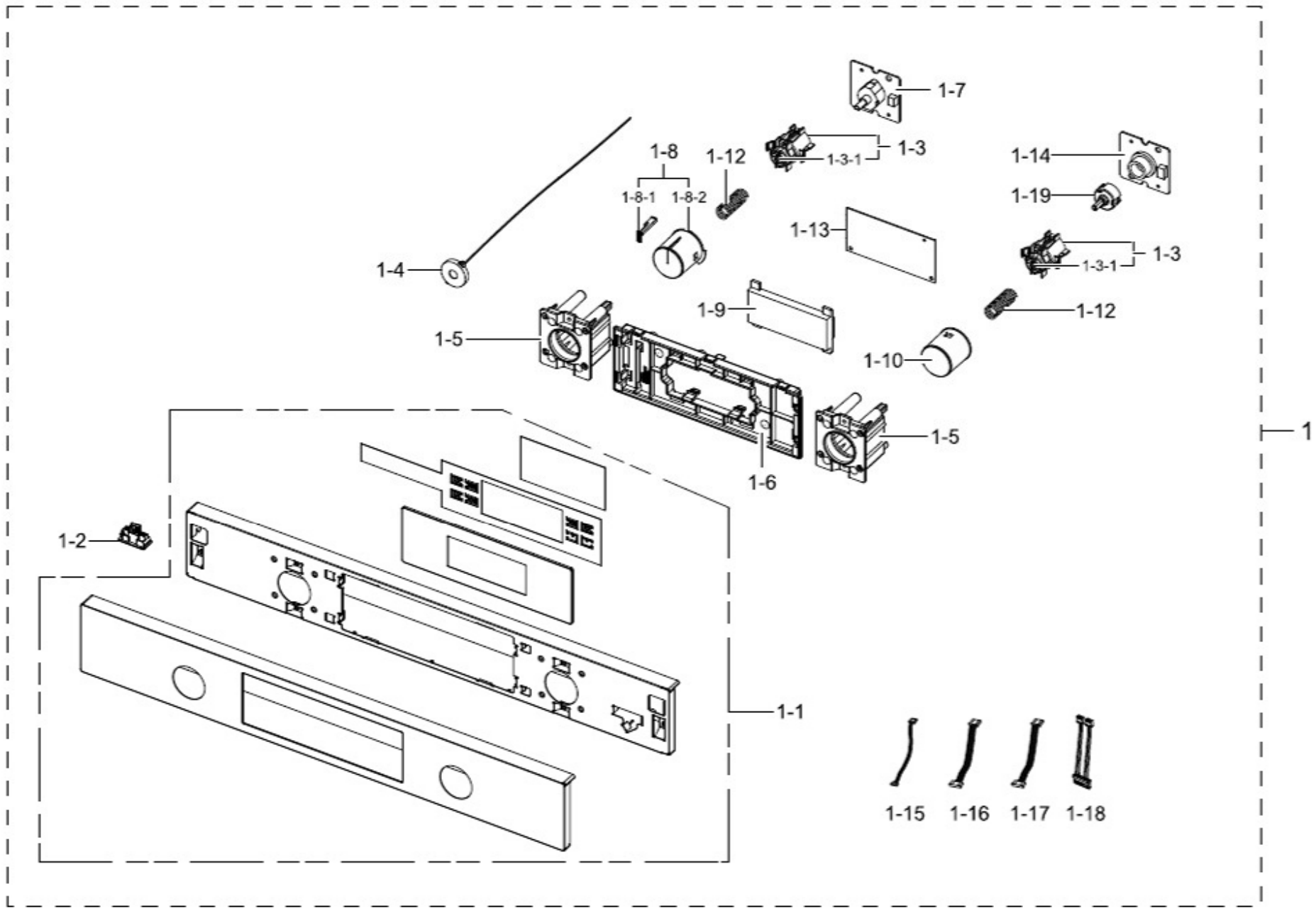
1-7
1-3
1-3-1
1-8
1-8-1
1-8-2
1-12
1-14
1-19
1-13
1-3
1-3-1
1-4
1-9
1-12
1-5
1-10
1-5
1-6
1-2
1-1
1-15
1-16
1-17
1-18
1

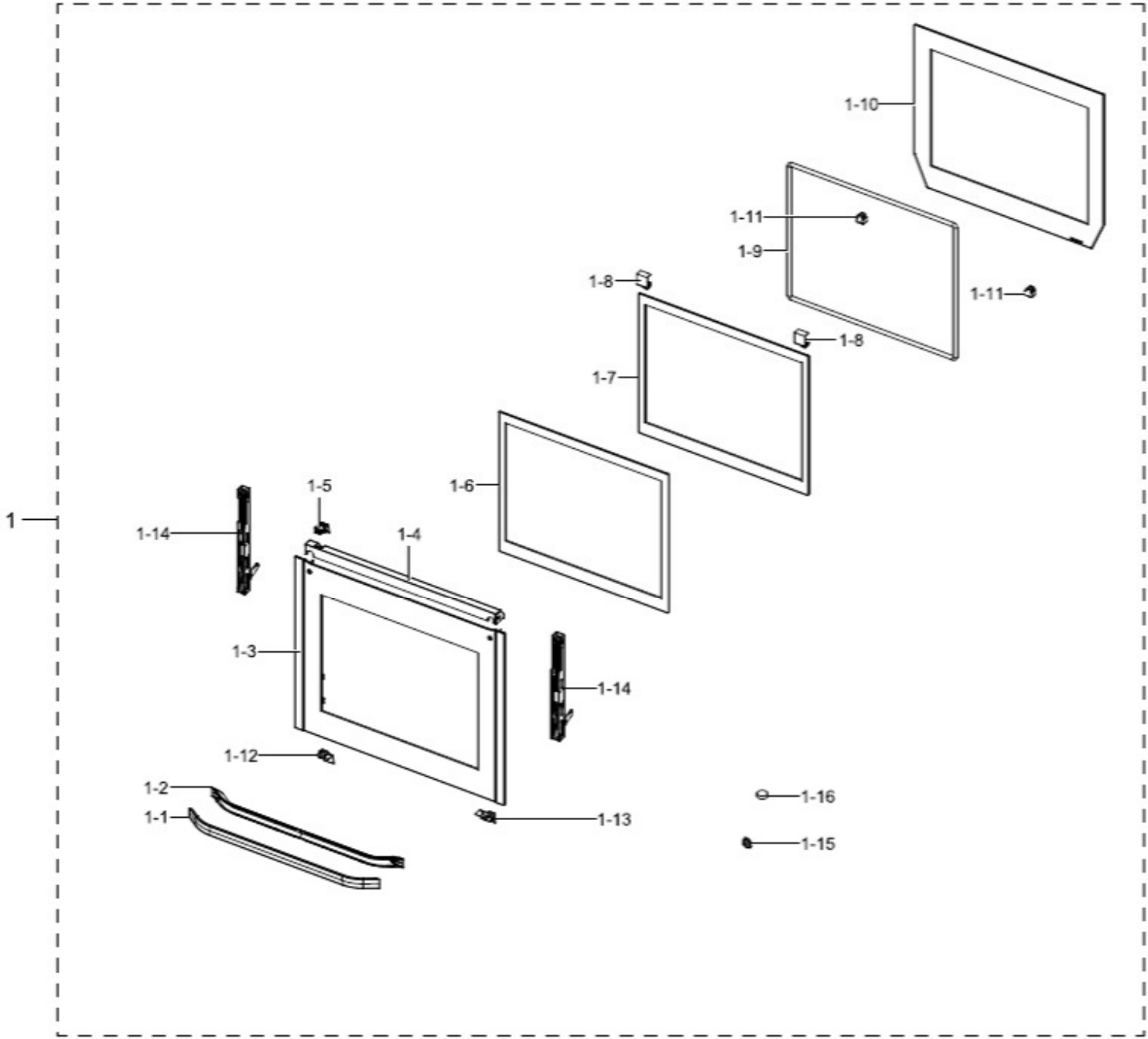
1
1-1
1-2
1-3
1-4
1-5
1-6
1-7
1-8
1-8
1-9
1-10
1-11
1-11
1-12
1-13
1-14
1-14
1-15
1-16