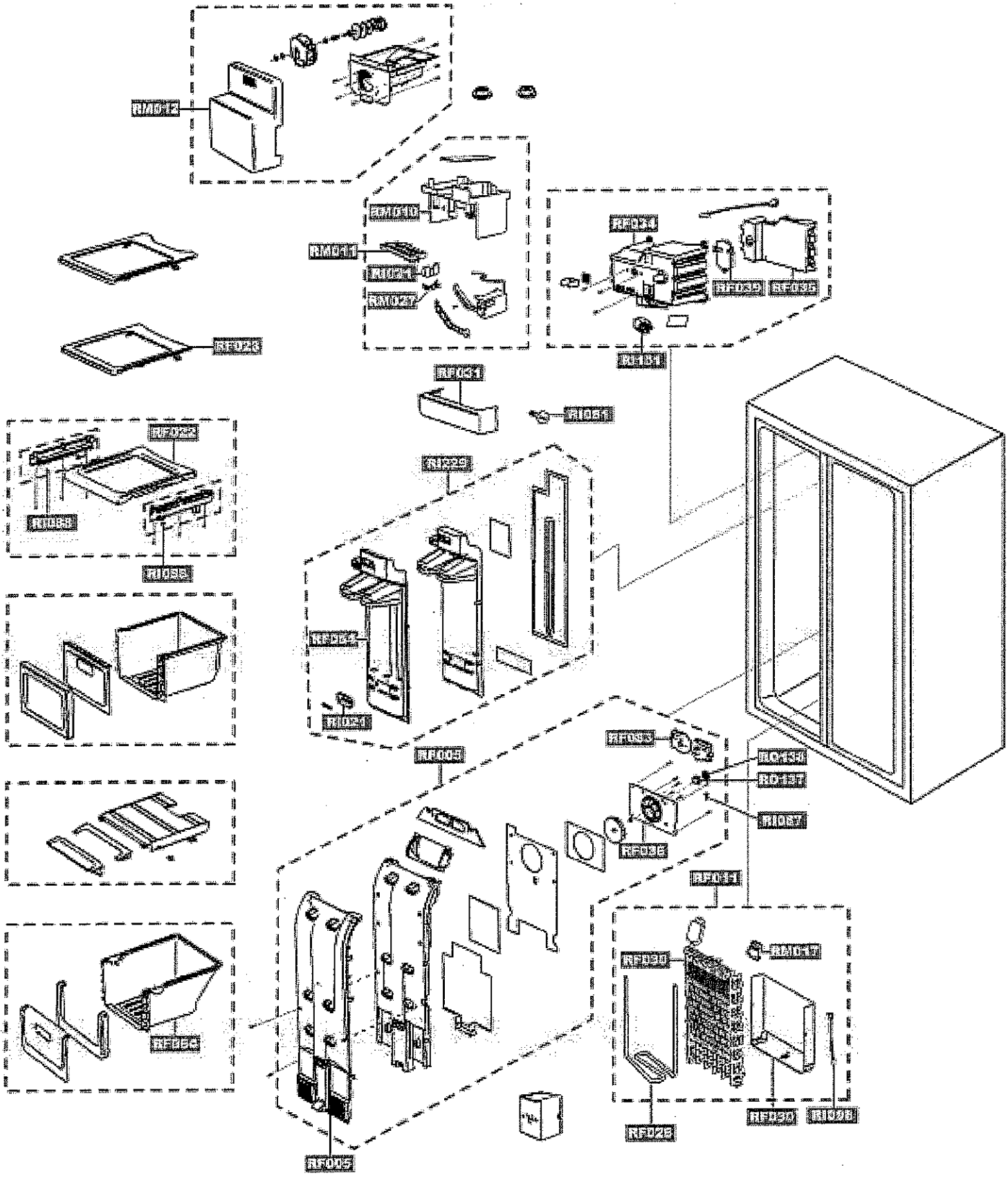
RM0012
RM0010
RM0011
RM0027
RF0034
RF0033
RF0036
RF0048
RF0031
RF0067
RF0022
RF0038
RF0036
RF0025
RF0024
RF0050
RF0005
RF0032
RM0136
RM0137
RF0037
RF0035
RF0041
RF0030
RM0017
RF0026
RF0029
RF0028
RF0005

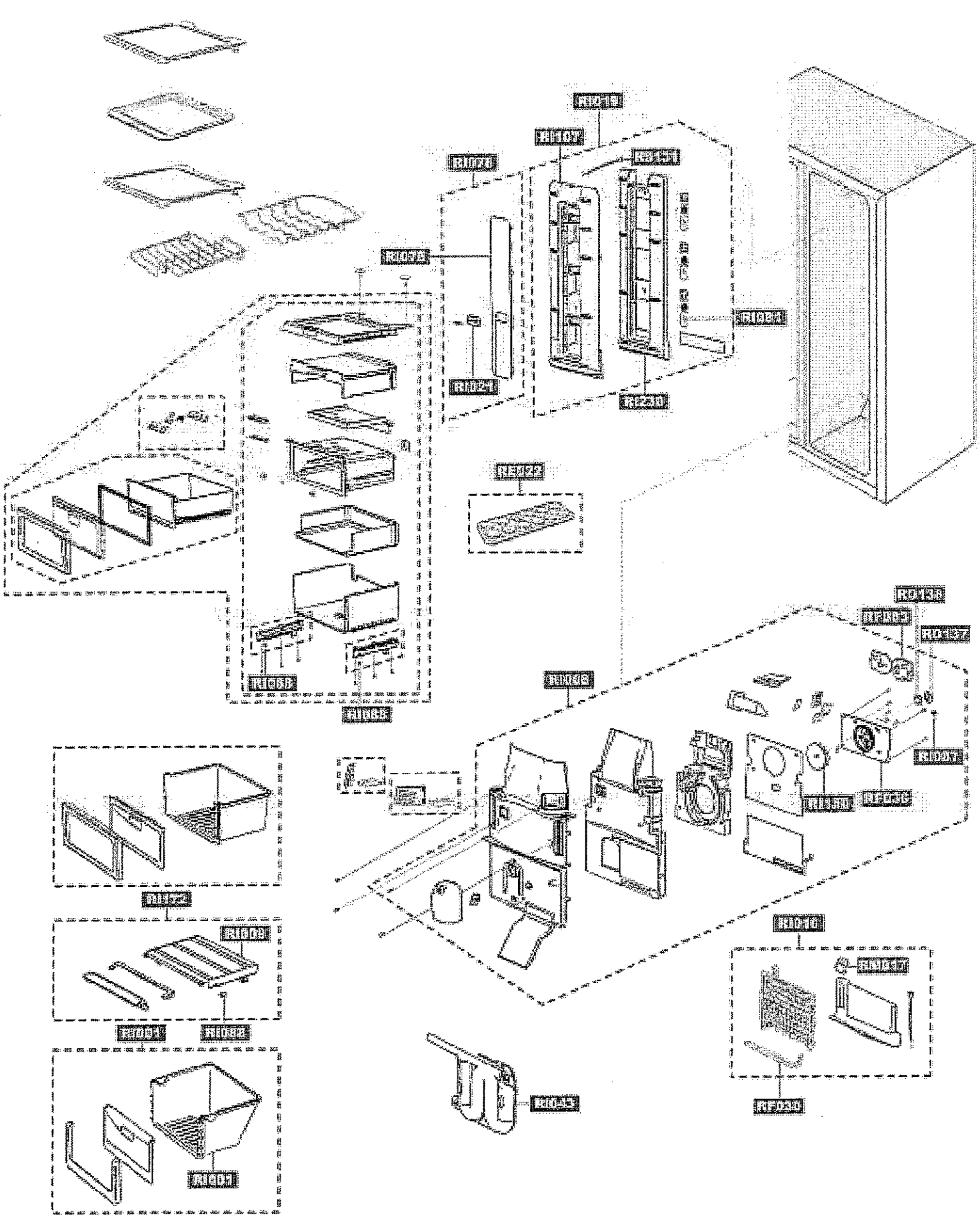
RL0107
RL0108
RL0107
RL0151
RL0108
RL0124
RL0230
RL0124
RL0122
RL0138
RF0182
RL0137
RL0058
RL0058
RL0048
RL0057
RL0150
RL0230
RL0122
RL0109
RL0084
RL0082
RL0076
RL0077
RL0043
RF0230
RL0071

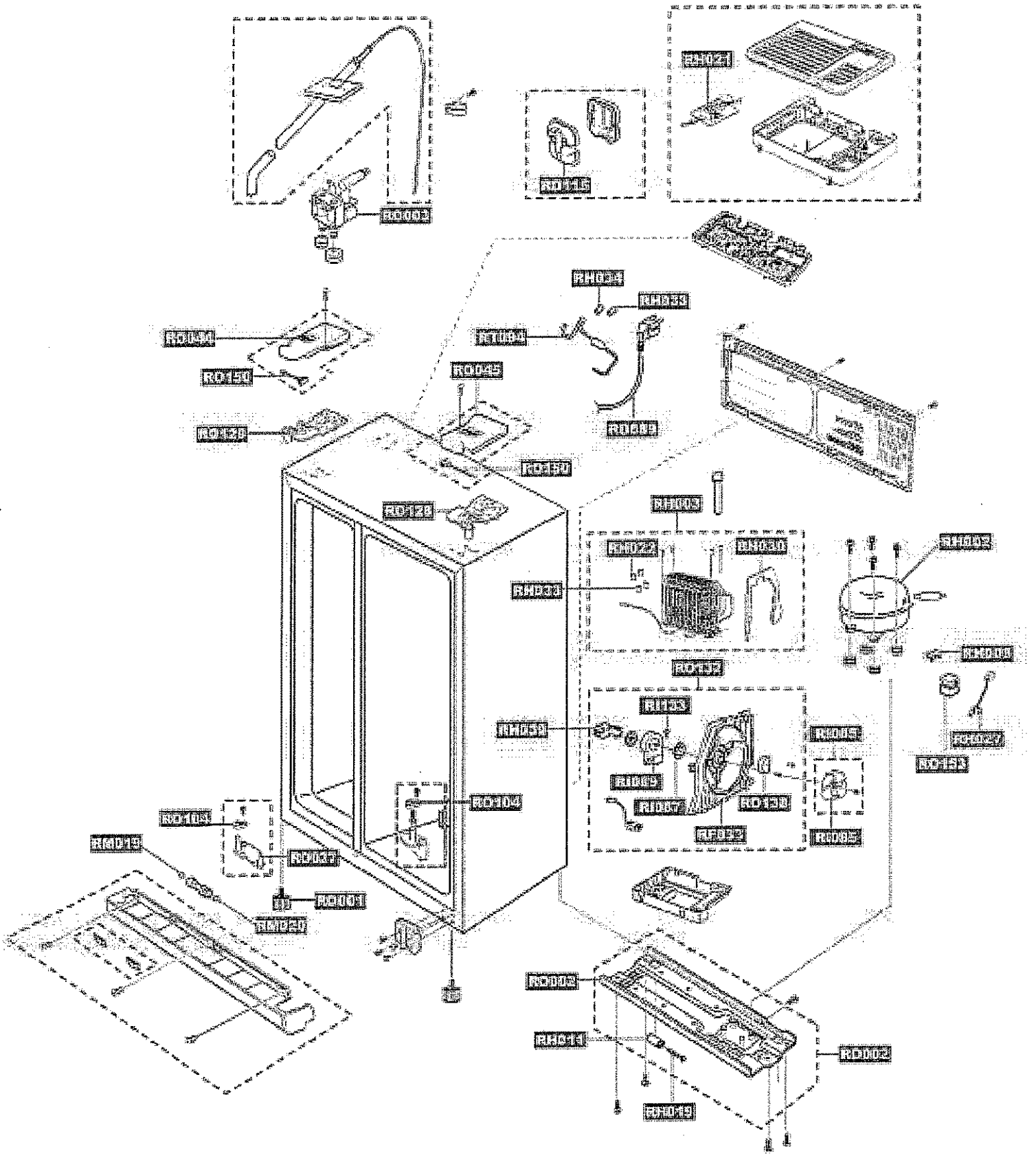
RH021
RH016
RO002
RH024
RH033
RH034
RO040
RO150
RO045
RO130
RO049
RO150
RO128
RH003
RH022
RH030
RH032
RH002
RH004
RO047
RO129
RH013
RH053
RH052
RO005
RH065
RH067
RO130
RH012
RH082
RO104
RO103
RH019
RO037
RO001
RH030
RO002
RH011
RO002
RH019

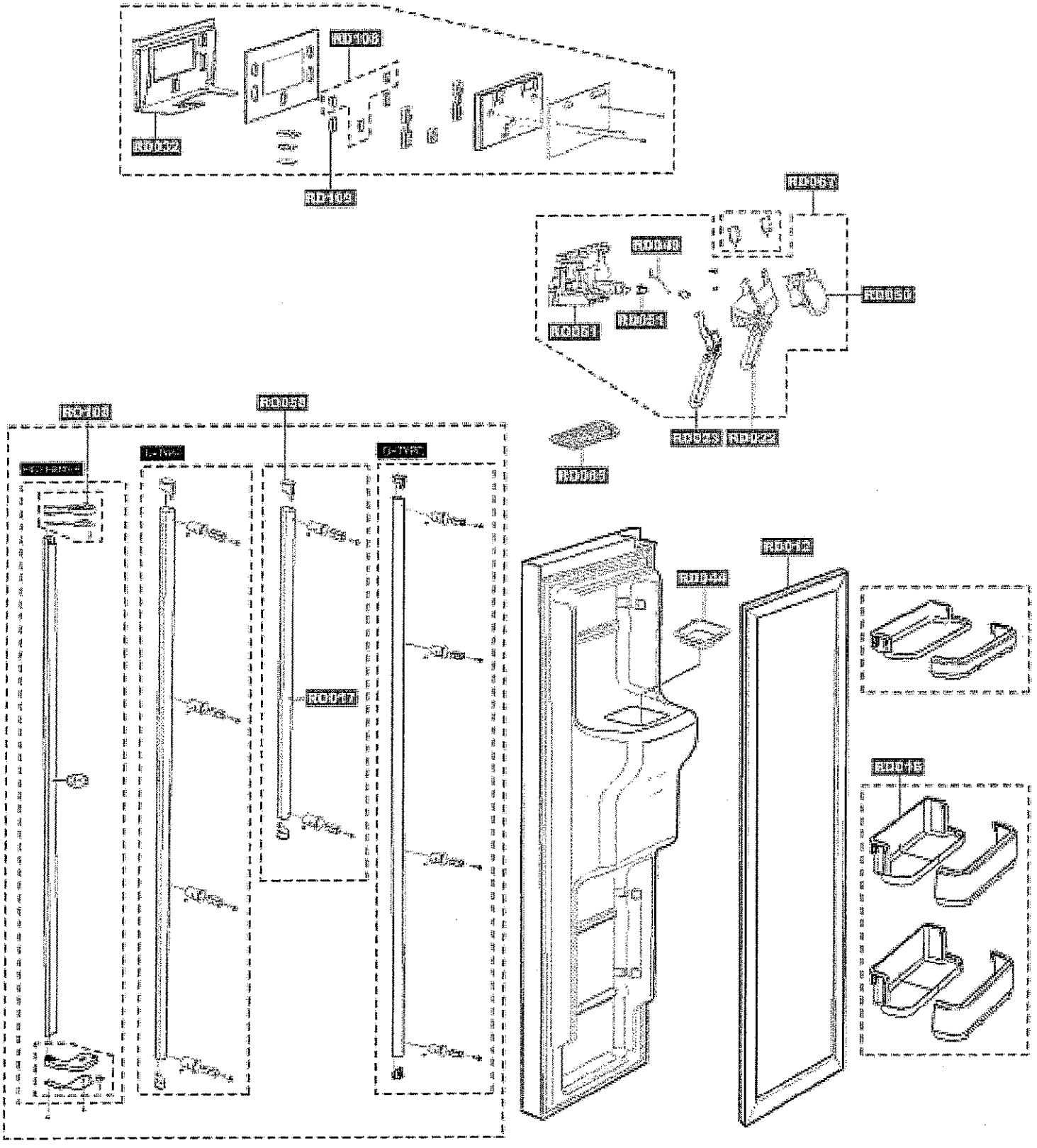
RD109
RD112
RD109
RD061
RD060
RD050
RD061
RD062
RD062
RD065
RD108
RD059
RD017
RD064
RD012
RD016

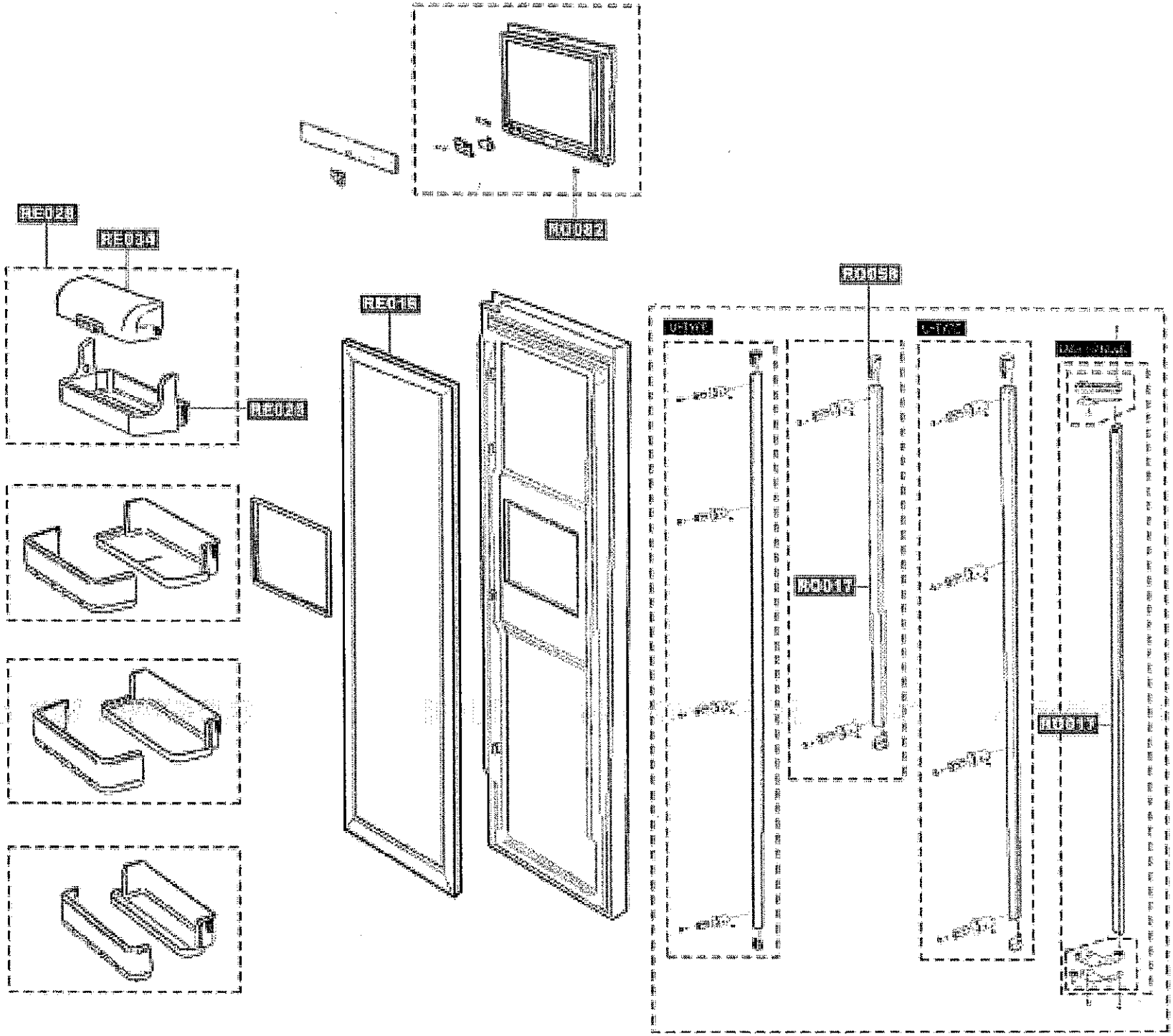
RE028
RE035
RE024
RE018
RA058
RA018
RA018