VUE A

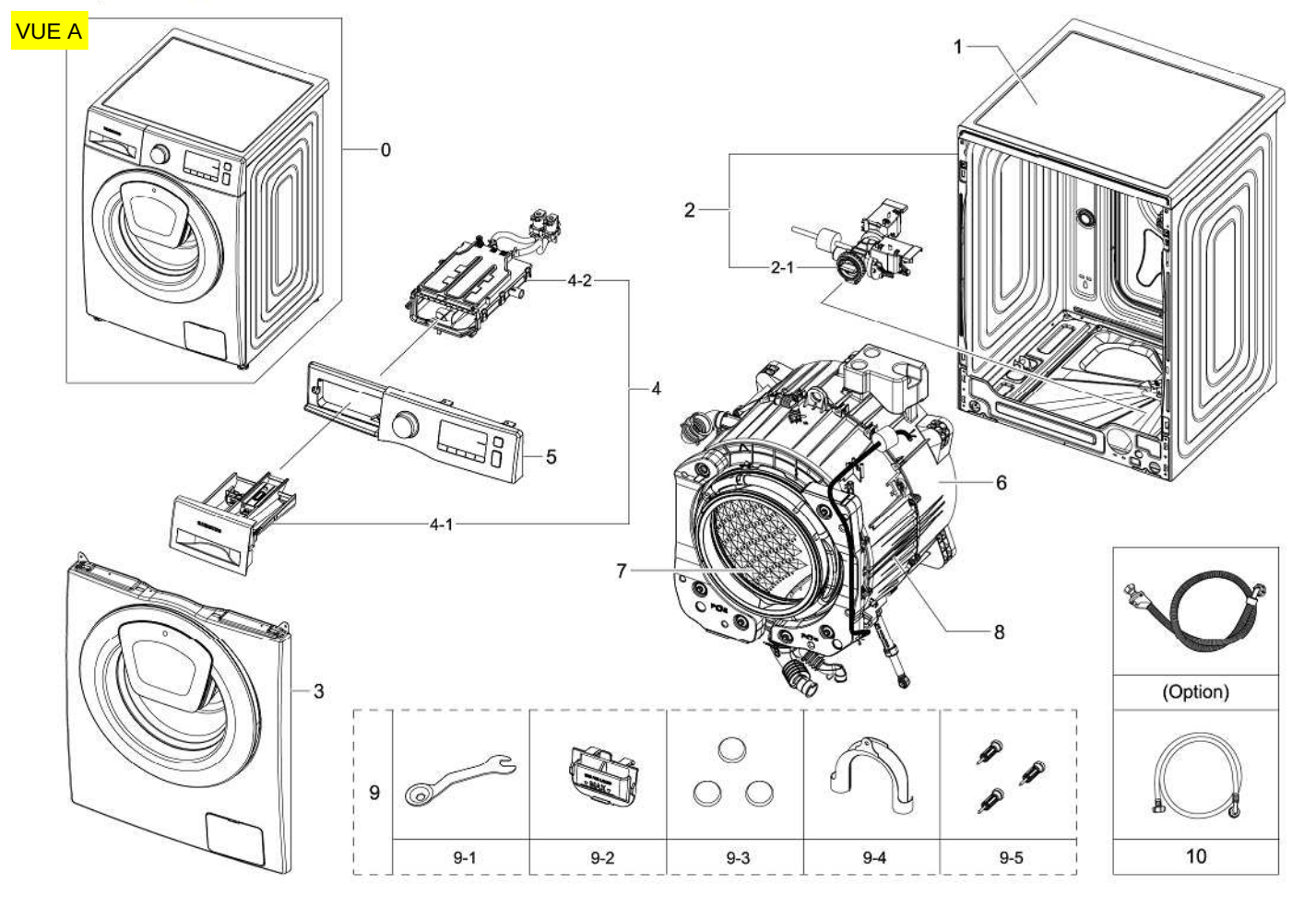

VUE B

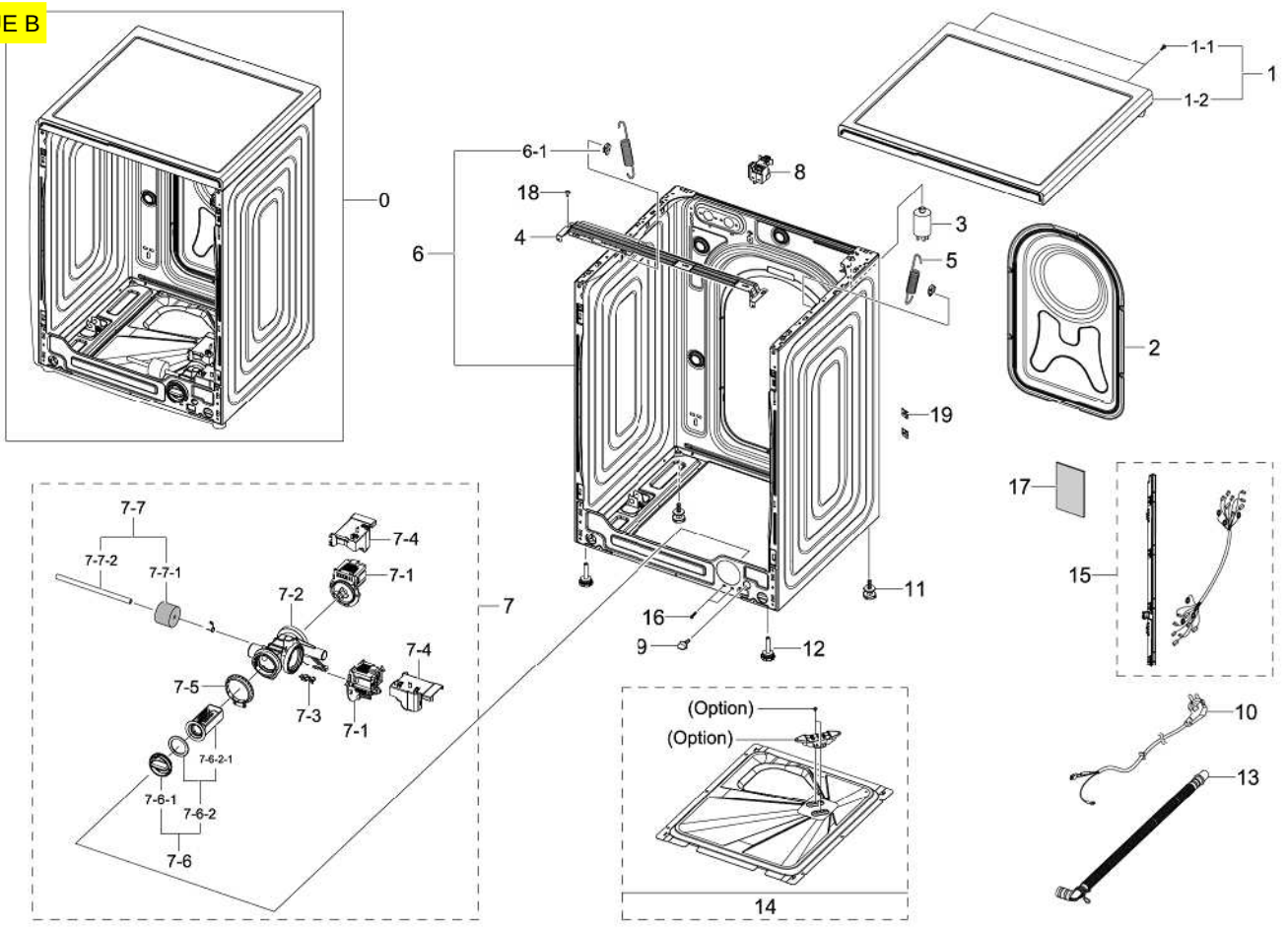
0
1
1-1
1-2
2
3
4
5
6
6-1
7
7-1
7-2
7-3
7-4
7-5
7-6
7-6-1
7-6-2
7-6-2-1
7-7
7-7-1
7-7-2
8
9
10
11
12
13
14
15
16
17
18
19
(Option)
(Option)

VUE C

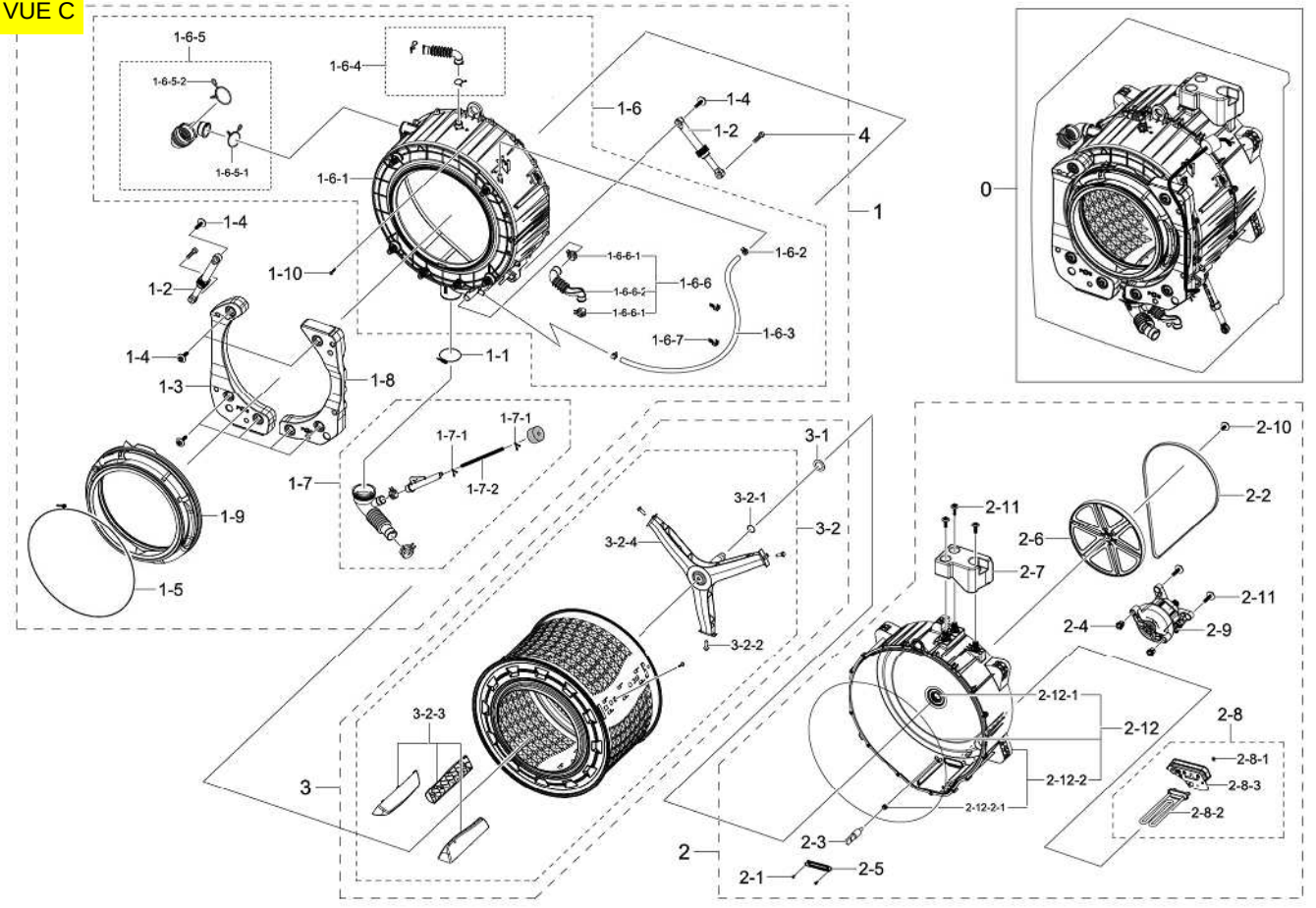
1-6-5
1-6-5-2
1-6-5-1
1-6-4
1-6
1-4
1-2
4
1
0
1-6-1
1-10
1-6-6-1
1-6-6-2
1-6-6-1
1-6-6
1-6-2
1-6-7
1-6-3
1-4
1-2
1-4
1-3
1-8
1-1
1-7-1
1-7-1
1-7-2
1-7
1-9
1-5
3-1
3-2-1
3-2
3-2-4
3-2-2
3-2-3
3
2-10
2-2
2-11
2-6
2-7
2-11
2-4
2-9
2-12-1
2-12
2-8
2-8-1
2-8-3
2-12-2
2-12-2-1
2-8-2
2-3
2
2-1
2-5

VUE D

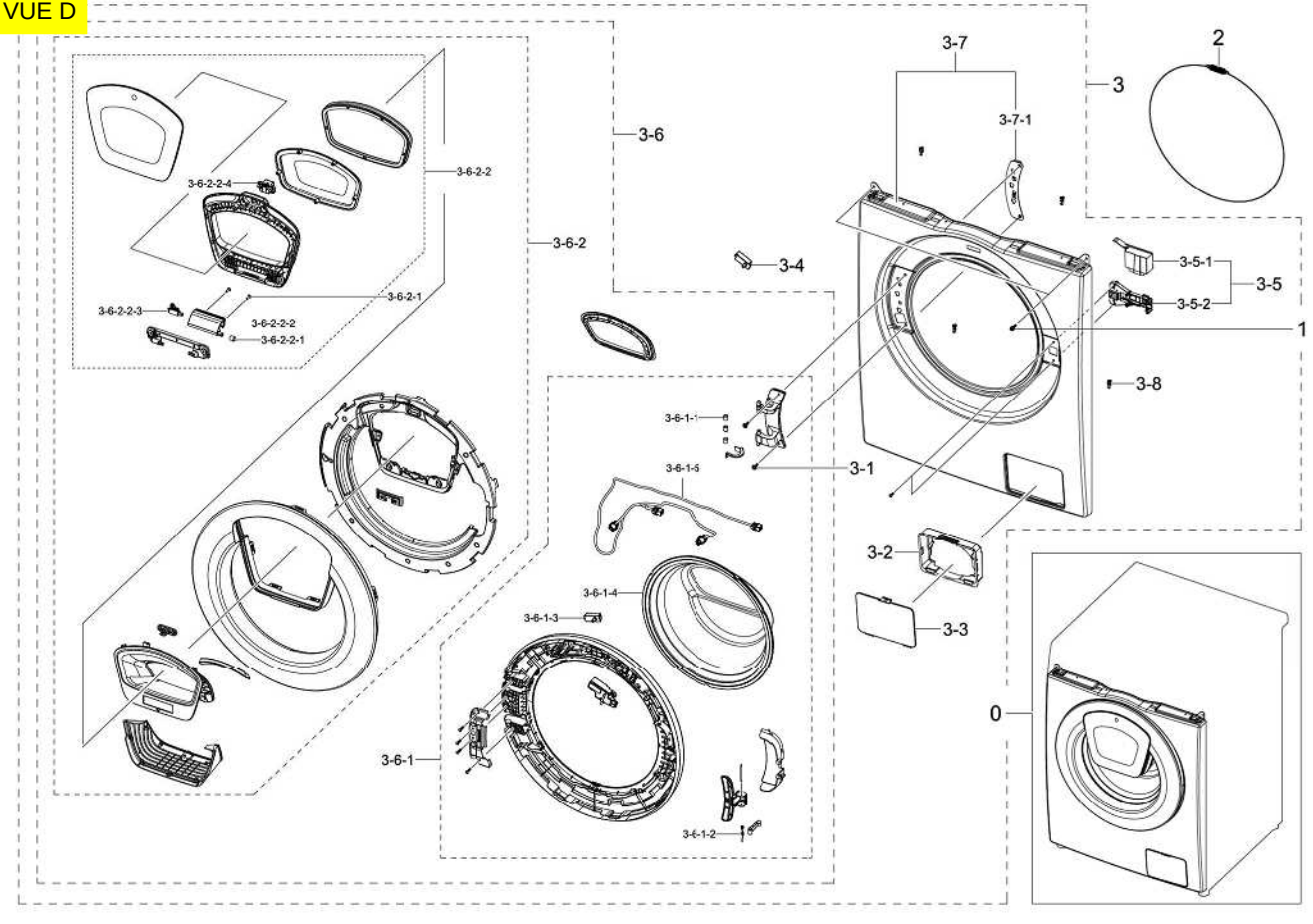
3-7
3-7-1
3
2
3-6
3-6-2-2
3-6-2-2-4
3-6-2
3-4
3-5-1
3-5
3-5-2
1
3-6-2-1
3-6-2-3
3-6-2-2-2
3-6-2-2-1
3-8
3-6-1-
3-6-1-5
3-1
3-2
3-6-1-4
3-6-1-3
3-3
0
3-6-1
3-6-1-2

VUE E

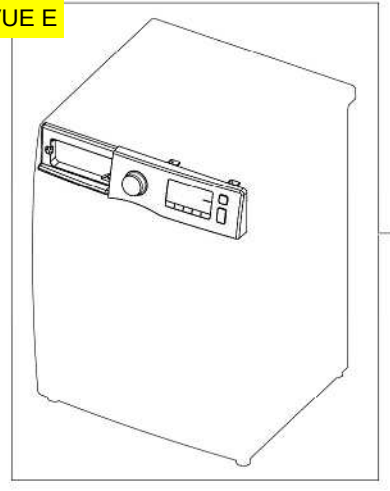

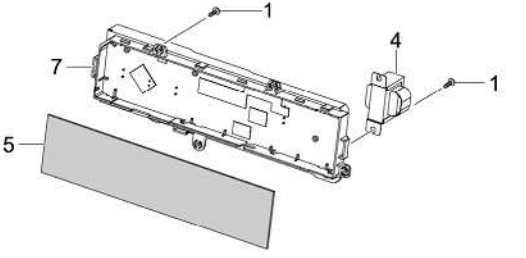

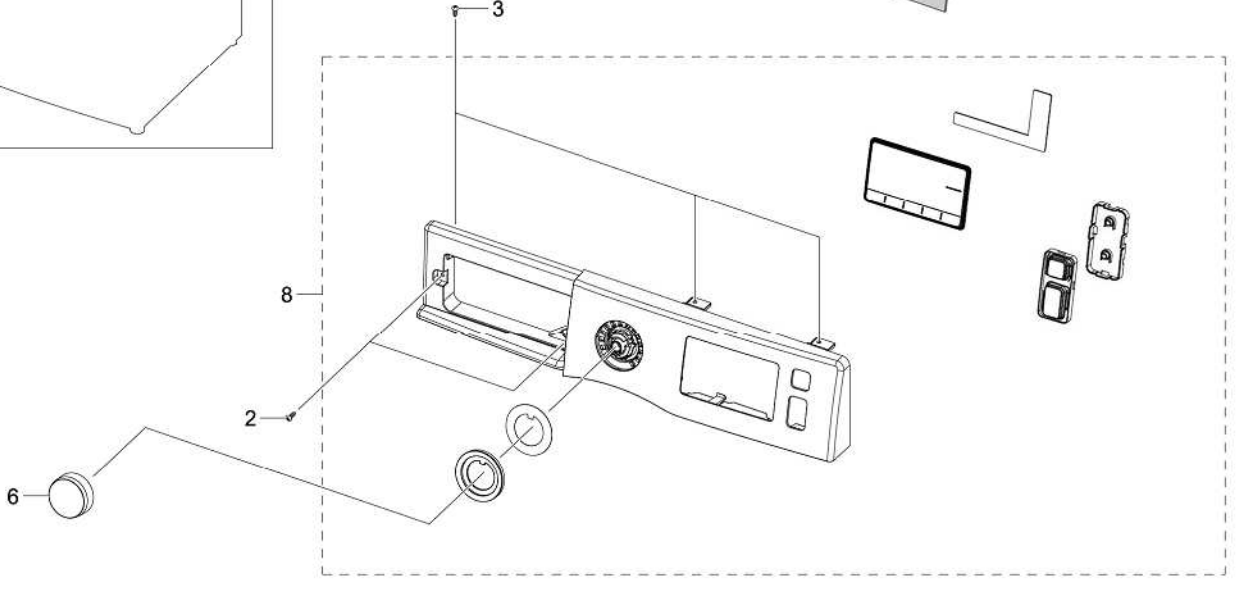

VUE F

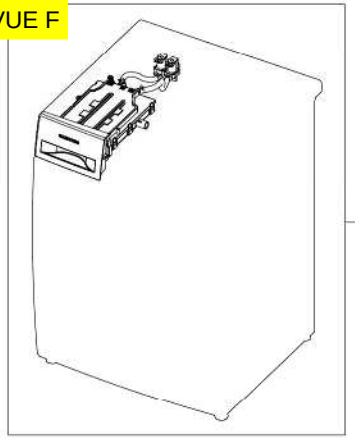

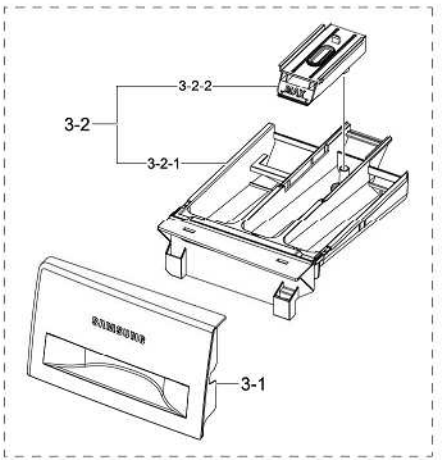

3

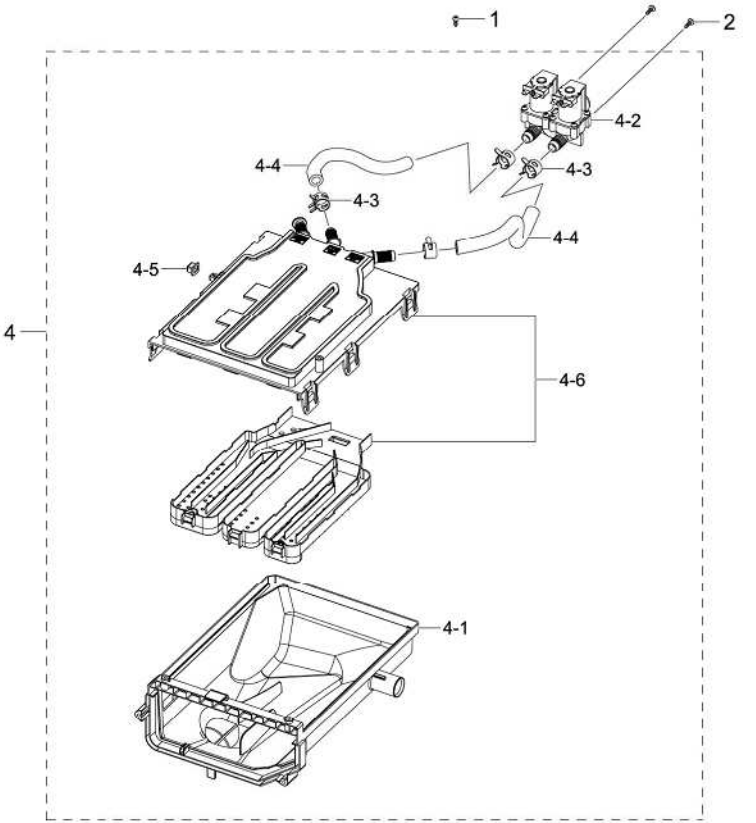

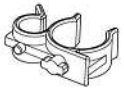					
1	2	3	4	5	6
7	8	9	10	11	

VUE G