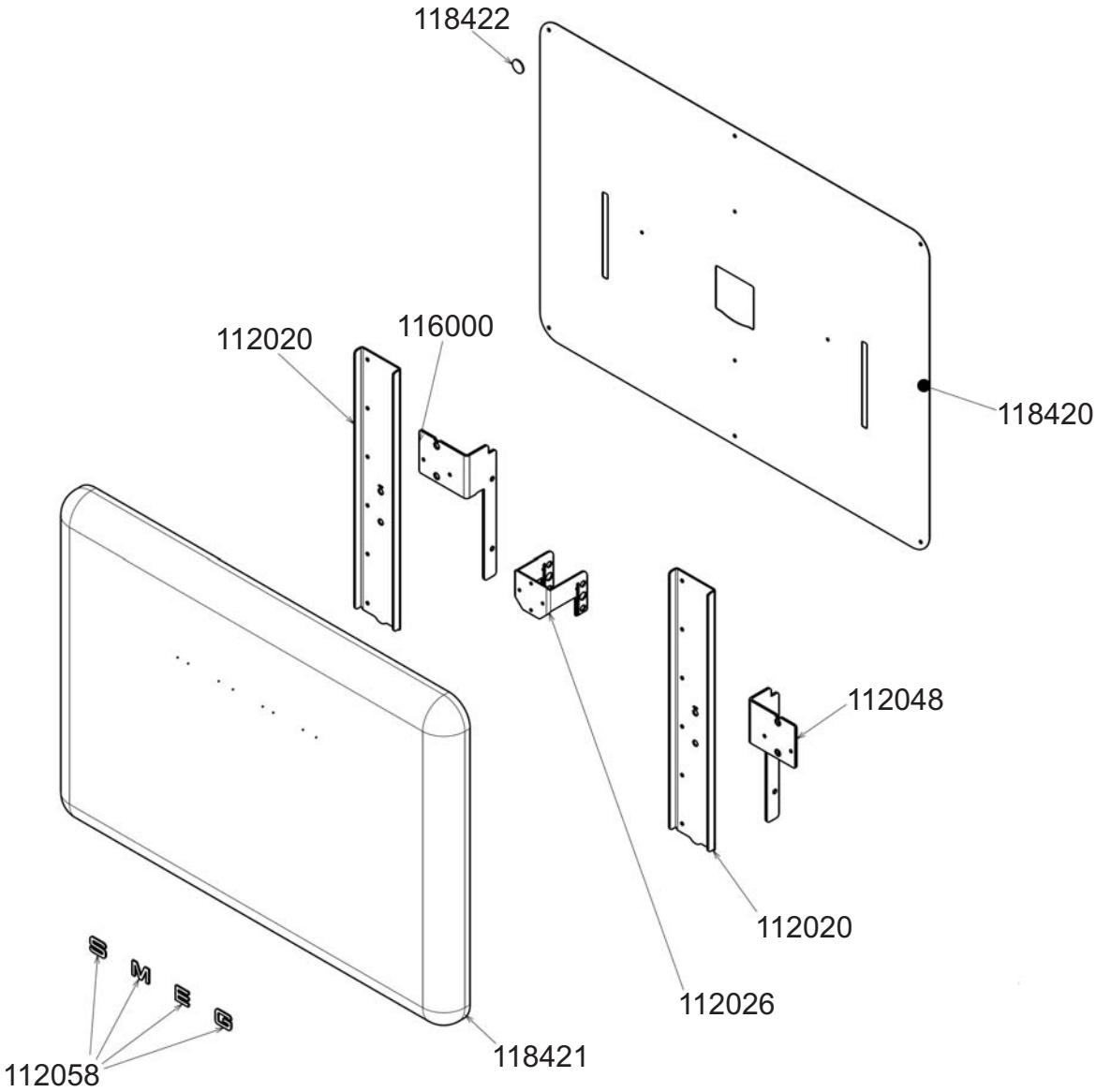
118422
118420
112020
116000
112048
112020
112026
118421
112058

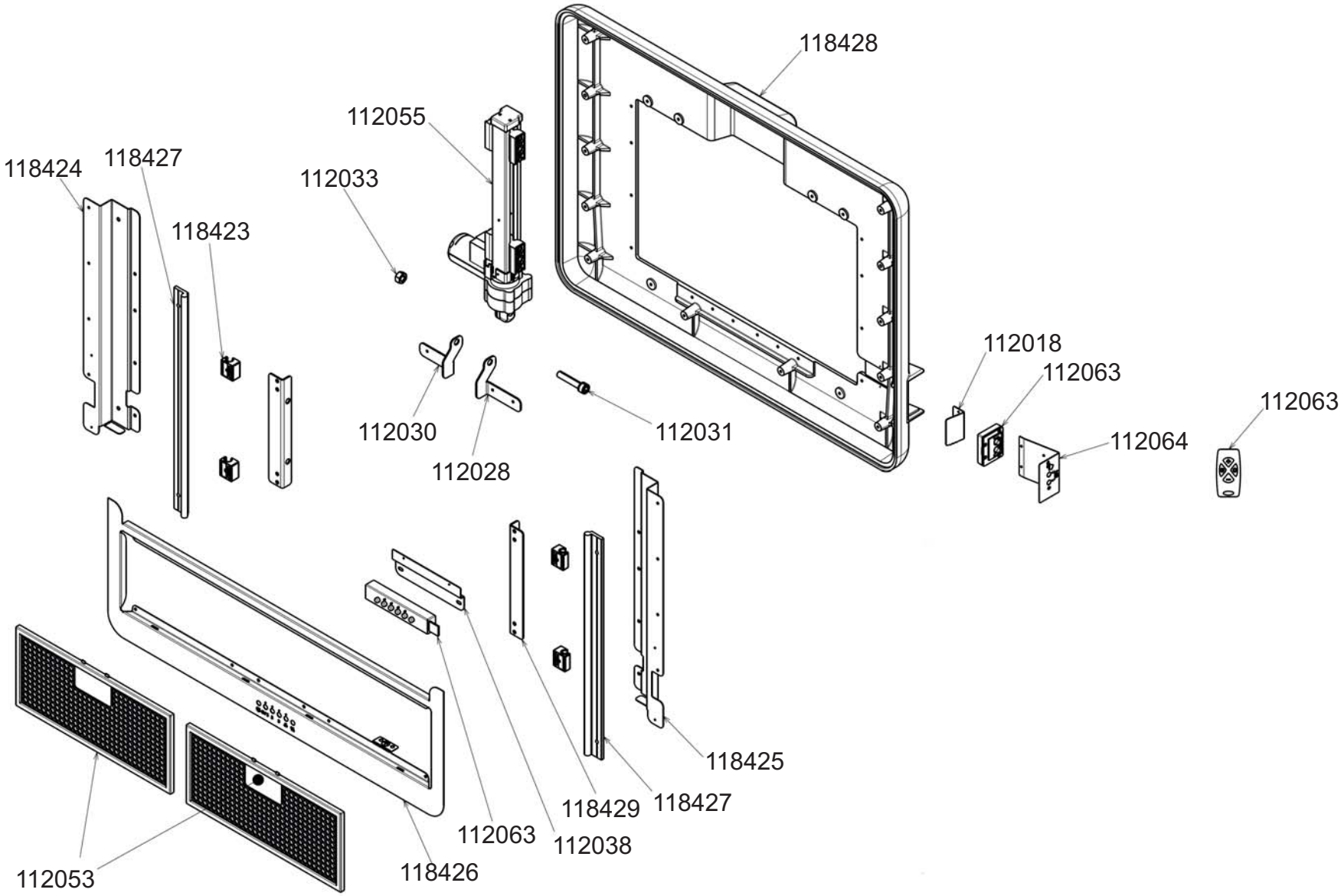
118428
112055
118424
118427
112033
118423
112018
112063
112063
112064
112030
112031
112028
118425
118429
118427
112063
112038
118426
112053

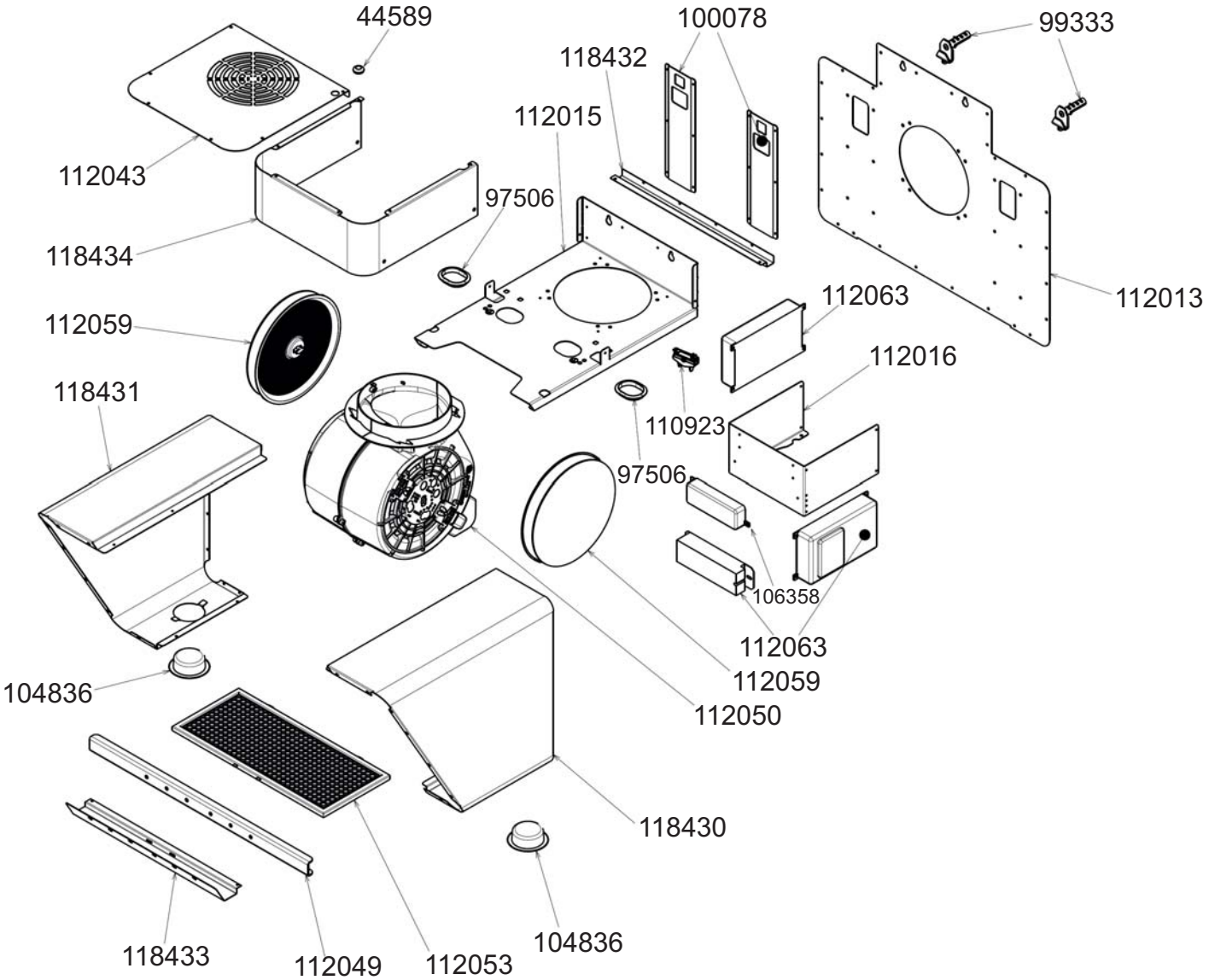
44589
100078
99333
118432
112015
112043
97506
118434
112013
112063
112059
112016
118431
110923
97506
106358
112063
112059
104836
112050
118430
118433
112049
112053
104836