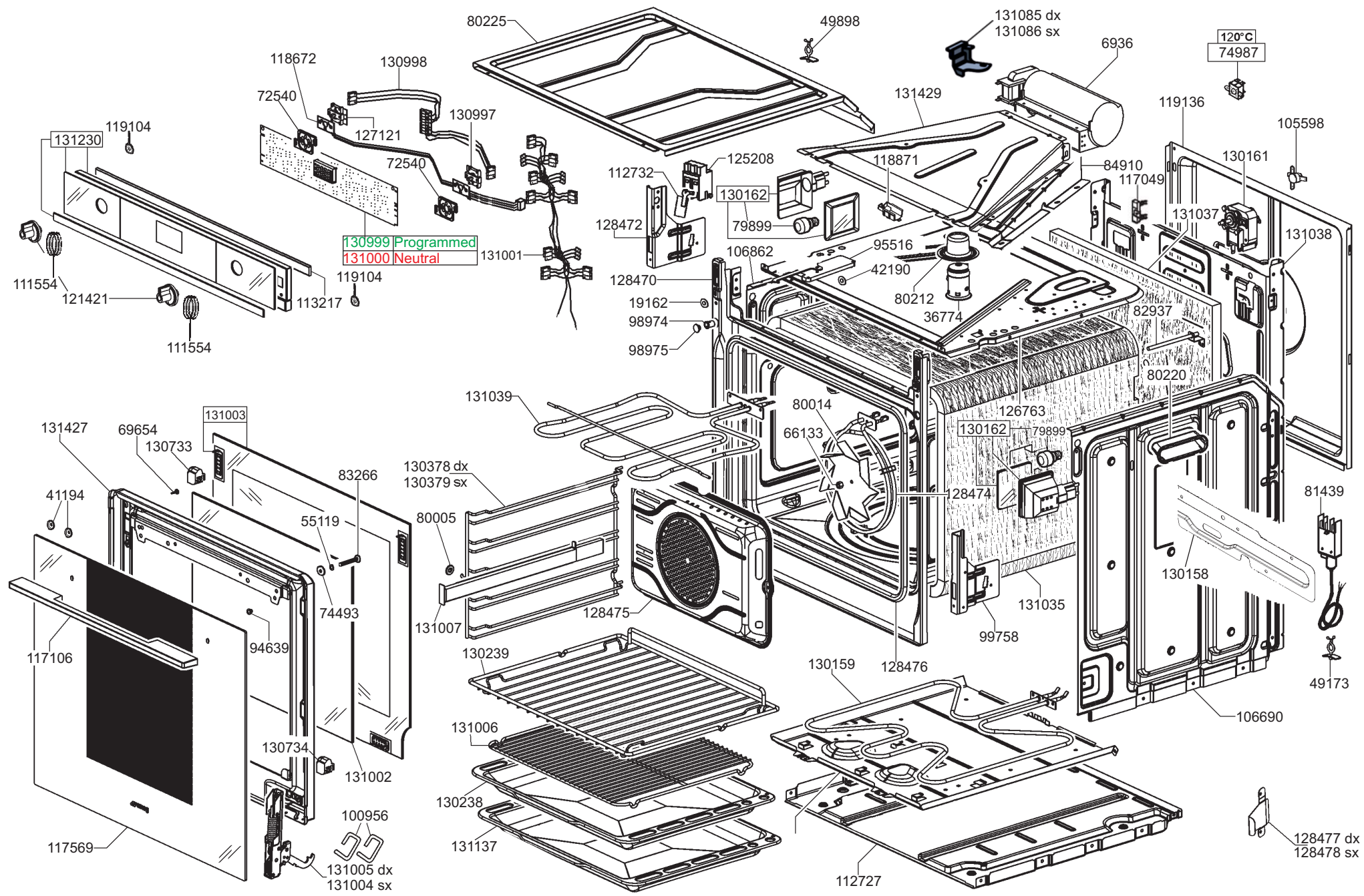
80225
49898
131085 dx
131086 sx
6936
120°C
74987
118672
130998
72540
131429
119136
105598
130997
127121
72540
125208
118871
84910
130161
112732
117049
130162
131037
131038
79899
128472
95516
106862
42190
128470
80212
82937
19162
36774
98974
98975
131039
80014
80220
126763
66133
130162
79899
128474
81439
130158
131035
99758
128476
49173
106690
130239
130159
131006
130238
131137
112727
128477 dx
128478 sx
131427
69654
131003
130733
83266
41194
55119
130378 dx
130379 sx
80005
131007
128475
74493
94639
117106
130734
131002
117569
100956
131005 dx
131004 sx
131230
119104
111554
121421
113217
119104
111554
130999 Programmed
131000 Neutral
131001