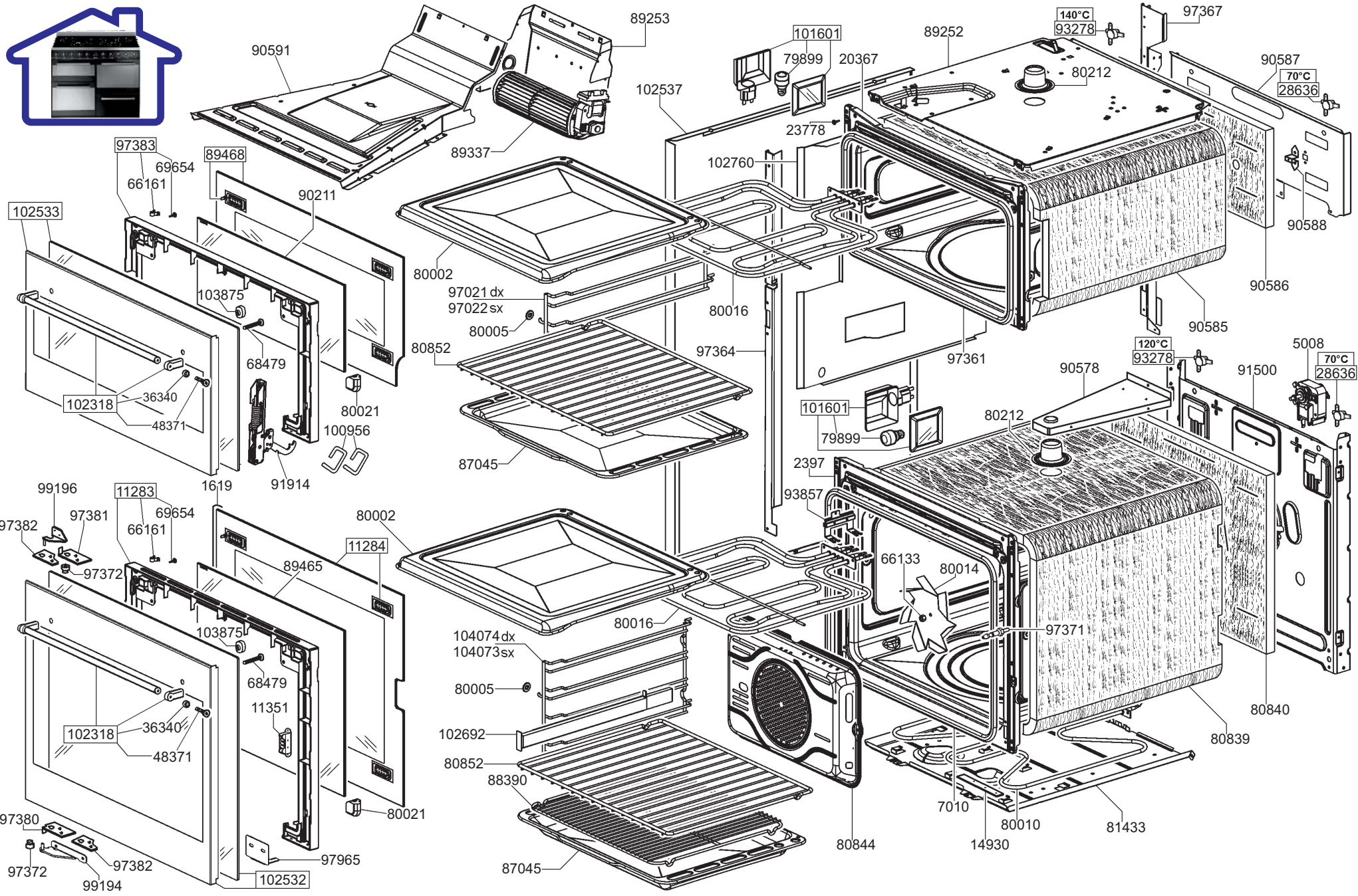
89253
90591
101601
79899
20367
89252
140°C
93278
97367
90587
70°C
28636
80212
102537
23778
89337
102760
97383
69654
66161
89468
90211
102533
90588
90586
80002
97021 dx
97022 sx
80016
103875
80005
68479
80852
97364
90585
97361
120°C
93278
5008
70°C
28636
90578
91500
102318
36340
48371
80021
100956
101601
79899
80212
87045
91914
1619
2397
93857
99196
11283
69654
97381
97382
66161
80002
11284
97372
89465
66133
80014
80016
97371
104074 dx
104073 sx
103875
68479
80005
11351
102318
36340
48371
102692
80840
80839
80852
88390
80021
7010
80010
81433
97380
97965
97372
97382
99194
102532
87045
80844
14930

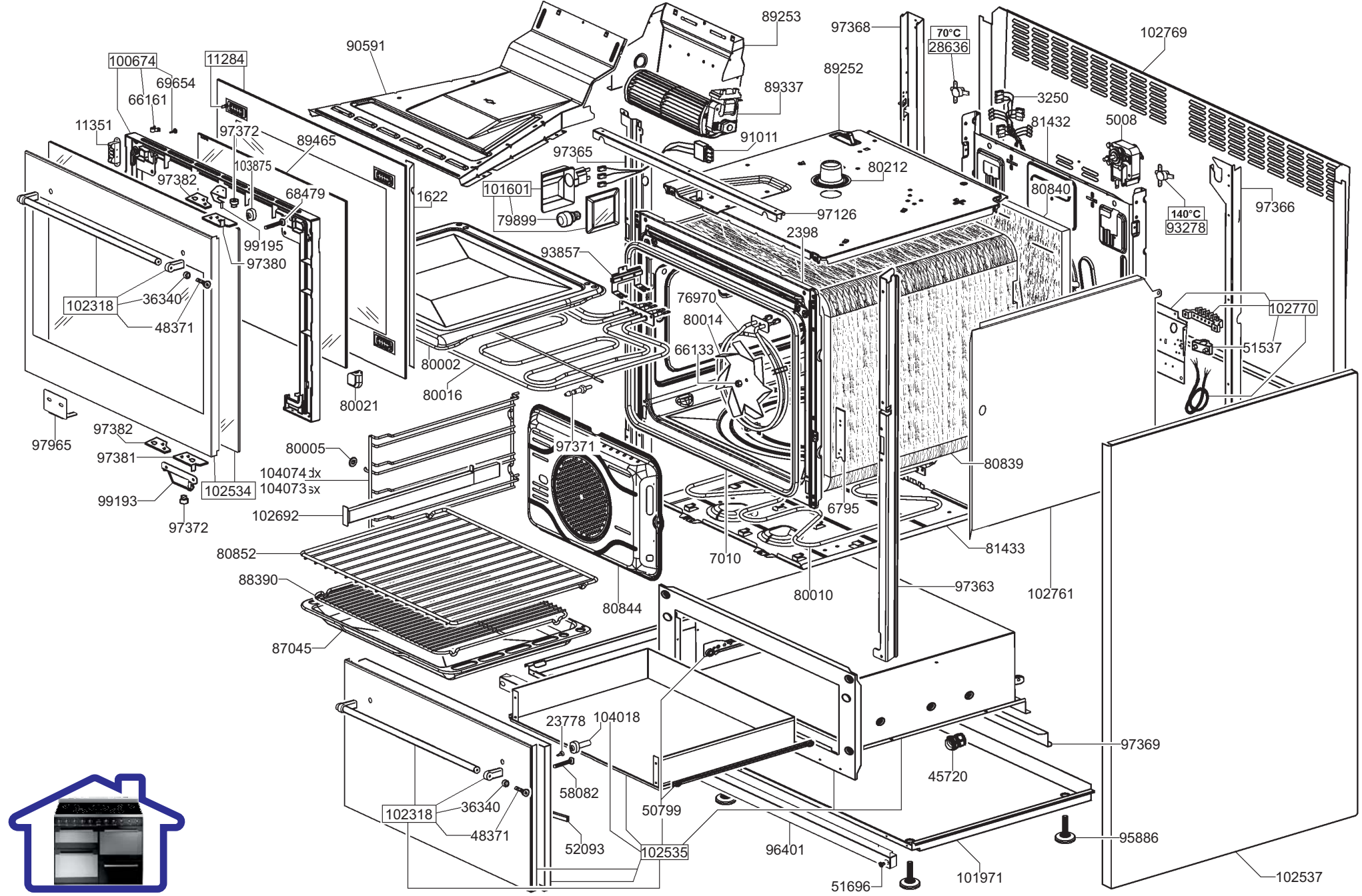
100674
69654
66161
11284
11351
97372
89465
103875
97382
68479
99195
97380
102318
36340
48371
90591
1622
80002
80016
80021
97965
97382
97381
99193
97372
102534
104074 dx
104073 sx
102692
80005
80852
88390
87045
89253
89337
91011
97365
101601
79899
93857
76970
80014
66133
97371
80844
7010
80010
97368
89252
80212
97126
2398
6795
80839
81433
97363
102761
70°C
28636
3250
81432
80840
5008
140°C
93278
102769
97366
102770
51537
23778
104018
58082
50799
102318
36340
48371
52093
102535
96401
51696
101971
97369
45720
95886
102537

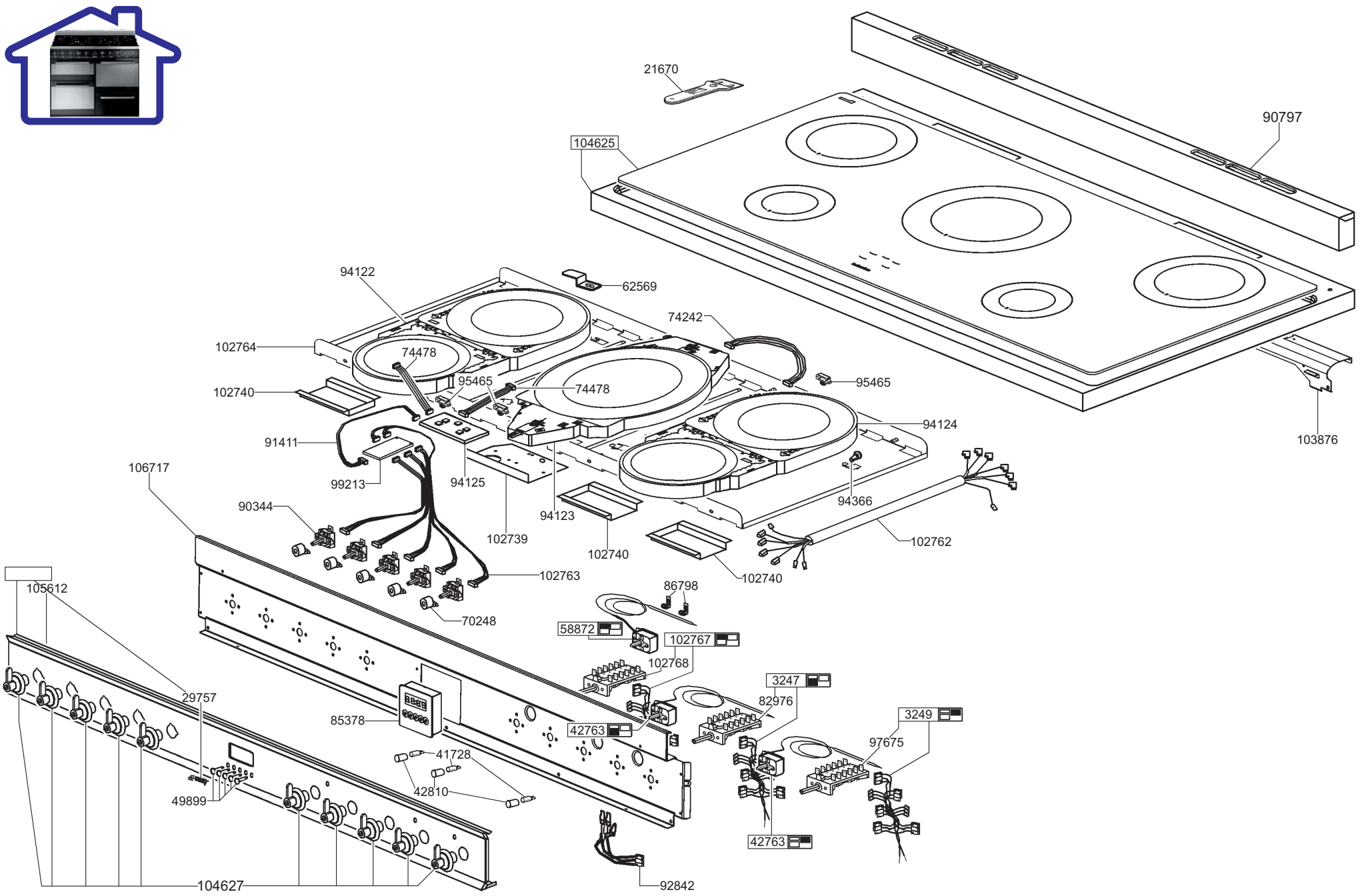
21670
90797
104625
94122
62569
74242
102764
74478
95465
74478
95465
102740
94124
91411
103876
106717
99213
94125
94366
90344
94123
102739
102740
102762
102763
102740
105612
86798
70248
58872
102767
102768
3247
29757
82976
85378
42763
3249
97675
41728
42810
49899
42763
104627
92842